Reliable energy measuring

Low-voltage current and voltage transformers



www.mbs-ag.com

Quality

MBS has all important international approvals and certifications

- UL certificate (Current transformer series CTB)
- IPH (Institute „Prüffeld für elektrische Hochleistungstechnik“) approval
- ISO 9001:2015
- PTB (Physikalisch-Technische Bundesanstalt) approval
- GOST certificate
- International approvals – Switzerland, Austria, Russia, Hungary, Czech Republic, Bulgaria, Romania, Slowakia and further countries











Our Product Range

Low-voltage current transformers for industrial applications — from page 19
Accuracy classes 1; 0,5; 0,2s



CTM - Mini current transformer — **from page 19**

Busbar 1:	Busbar 2:	Diameter:	Width:	Current range:	Type:	Page:
-	-	7,6 mm	27,5 mm	30 ... 64 A	CTM 7	Page 20

ASR - Tubular current transformer — **from page 21**



Busbar 1:	Busbar 2:	Diameter:	Width:	Current range:	Type:	Page:
-	-	14 mm	45 mm	40 ... 150 A	ASR 14.3	Page 22
-	-	21 mm	45 mm	50 ... 300 A	ASR 20.3	Page 23
-	-	21 mm	44 mm	60 ... 300 A	ASR 201.3	Page 24
-	-	22,8 mm	49,5 mm	100 ... 500 A	ASR 21.3	Page 25
-	-	21,2 mm	50 mm	50 ... 600 A	ASR 21.5	Page 26
-	-	22,5 mm	61 mm	50 ... 600 A	ASR 22.3	Page 27
-	-	42 mm	71 mm	150 ... 800 A	ASR 42.45	Page 29

ASG - Tubular current transformer, resin hardened — **from page 30**

Busbar 1:	Busbar 2:	Diameter:	Width:	Current range:	Type:	Page:
-	-	20,8 mm	44 mm	60 ... 300 A	ASG 210.3	Page 30



ASKL - Plug-in current transformer for fuse switch disconnectors, type InLine II of size 00 + 123 — **from page 31**

19 x 12 mm	-	16,4 mm	45 mm	80 ... 160 A	ASKL 19.34	Page 32
31 x 12 mm	-	18,6 mm	60 mm	250 ... 600 A	ASKL 31.34	Page 33

AS - Plug-in current transformer for fuse switch disconnectors, type SlimLine of size XR1 — **from page 34**

Busbar 1:	Busbar 2:	Diameter:	Width:	Current range:	Type:	Page:
17 x 6 mm	-	15,2 mm	45 mm	75 ... 250 A	AS 176.3	Page 34

ASK - Plug-in current transformer — **from page 35**



Busbar 1:	Busbar 2:	Diameter:	Width:	Current range:	Type:	Page:
17 x 6 mm	-	15,2 mm	45 mm	75 ... 250 A	ASK 176.3	Page 40
20 x 5 mm	-	17,5 mm	49,5 mm	60 ... 400 A	ASK 205.3	Page 41
20 x 10 mm	-	19,2 mm	61 mm	50 ... 500 A	ASK 21.3	Page 42
20 x 10 mm	-	20 mm	71 mm	40 ... 500 A	ASK 421.4	Page 43
30 x 10 mm	-	28 mm	50 mm	60 ... 500 A	ASK 231.5	Page 44
30 x 10 mm	2x 20 x 10 mm	26 mm	61 mm	50 ... 750 A	ASK 31.3	Page 45
30 x 10 mm	2x 20 x 10 mm	28 mm	61 mm	50 ... 750 A	ASK 31.4	Page 47
30 x 10 mm	2x 20 x 10 mm	28 mm	61 mm	40 ... 750 A	ASK 31.5	Page 49
30 x 10 mm	20 x 13 mm	23 mm	95 mm	40 ... 750 A	ASK 31.6	Page 51
31 x 18 mm	-	26 mm	61 mm	60 ... 600 A	ASK 318.3	Page 52
40 x 10 mm	2x 30 x 5 mm	32 mm	71 mm	50 ... 1000 A	ASK 41.4	Page 53
40 x 10 mm	2x 30 x 5 mm	32 mm	86 mm	30 ... 750 A	ASK 541.4	Page 55
40 x 10 mm	2x 30 x 5 mm	32 mm	71 mm	60 ... 1000 A	ASK 41.5	Page 57
40 x 12 mm	32 x 18 mm	26 mm	61 mm	100 ... 750 A	ASK 41.3	Page 58
40 x 12 mm	30 x 15 mm	30,5 mm	71 mm	50 ... 800 A	ASK 412.4	Page 59
40 x 12 mm	30 x 15 mm	32 mm	95 mm	50 ... 1000 A	ASK 41.6	Page 61
50 x 10 mm	2x 40 x 10 mm	44 mm	86 mm	100 ... 1250 A	ASK 51.4	Page 62
50 x 12 mm	2x 40 x 10 mm	40 mm	95 mm	100 ... 1250 A	ASK 51.6	Page 64
60 x 10 mm	2x 50 x 10 mm	44 mm	86 mm	200 ... 1250 A	ASK 561.4	Page 65
63 x 10 mm	2x 50 x 10 mm	44 mm	96 mm	200 ... 1200 A	ASK 61.4	Page 66
60,6 x 15,15 mm	-	52 mm	90 mm	200 ... 1600 A	ASK 615.3	Page 69
60 x 10 mm	2x 50 x 10 mm	40 mm	95 mm	100 ... 1200 A	ASK 61.6	Page 71
60 x 30 mm	50 x 40 mm	44 mm	96 mm	300 ... 1600 A	ASK 63.4	Page 73
60 x 30 mm	-	30 mm	88 mm	200 ... 2000 A	ASK 63.6	Page 74
80 x 10 mm	2x 60 x 10 mm	55 mm	120 mm	400 ... 2000 A	ASK 81.4	Page 75
3 x 80 x 10 mm	3 x 60 x 10 mm	70 mm	106 mm	400 ... 2500 A	ASK 83.3	Page 77

Our Product Range

Low-voltage current transformers for industrial applications — from page 78
Accuracy classes 1; 0,5; 0,2s

ASK - Plug-in current transformer



Busbar 1:	Busbar 2:	Diameter:	Width:	Current range:	Type:	Page:
84 x 34 mm	-	34 mm	96 mm	300 ... 2000 A	ASK 83.4	Page 79
100 x 10 mm	2x 80 x 10 mm	70 mm	130 mm	500 ... 2000 A	ASK 101.4	Page 81
2x 100 x 10 mm	3x 80 x 10 mm	85 mm	172 mm	750 ... 3000 A	ASK 103.3	Page 83
103 x 41 mm	-	40 mm	99 mm	400 ... 2000 A	ASK 103.41	Page 84
100 x 56 mm	-		129 mm	400 ... 4000 A	ASK 105.3	Page 85
100 x 55 mm	-	55 mm	129 mm	600 ... 3000 A	ASK 105.6	Page 88
100 x 55 mm	-	55 mm	129 mm	2500 ... 4000 A	ASK 105.6N	Page 89
123 x 30 mm	3x 100 x 10 mm	100 mm	172 mm	750 ... 3000 A	ASK 123.3	Page 90
122 x 71 mm	-		159 mm	400 ... 4000 A	ASK 127.3	Page 91
120 x 70 mm	-	70 mm	159 mm	1000 ... 2500 A	ASK 127.4	Page 94
120 x 70 mm	-	70 mm	205 mm	1000 ... 6000 A	ASK 127.6	Page 95
128 x 38 mm	-	38 mm	100 mm	400 ... 2500 A	ASK 128.4	Page 96
120 x 90 mm	-	90 mm	250 mm	1000 ... 7500 A	ASK 129.10	Page 97
130 x 25 mm	-	25 mm	180 mm	300 ... 1600 A	ASK 130.3	Page 98
130 x 30 mm	-	30 mm	180 mm	300 ... 3200 A	ASK 130.5	Page 99
190 x 60 mm	3x 160 x 10 mm	-	266 mm	1000 ... 4000 A	ASK 165.5	Page 100
230 x 60 mm	3x 200 x 10 mm	-	306 mm	1200 ... 5000 A	ASK 205.5	Page 104

Low-voltage current transformers for industrial applications with screwless connection technology, „Cage Clamp®“ page 108
Accuracy classes 1; 0,5; 0,2s

CTB - Plug-in current transformer with screwless connection technology „Cage Clamp®“, UL certi. **from page 109**



Busbar 1:	Busbar 2:	Diameter:	Width:	Current range:	Type:	Page:
30 x 10 mm	25 x 12 mm	25,7 mm	60 mm	50 ... 750 A	CTB 31.35	Page 110
40 x 10 mm	30 x 15 mm	31,8 mm	70 mm	75 ... 1000 A	CTB 41.35	Page 111
50 x 12 mm	40 x 30 mm	43,7 mm	85 mm	100 ... 1250 A	CTB 51.35	Page 112
63 x 10 mm	50 x 30 mm	43,7 mm	95 mm	200 ... 1600 A	CTB 61.35	Page 113
80 x 10 mm	60 x 30 mm	54,7 mm	120 mm	400 ... 2000 A	CTB 81.35	Page 114
100 x10 mm	80 x 30 mm	70 mm	130 mm	400 .... 2500 A	CTB 101.35	Page 115

Low-voltage current transformers for industrial applications — from page 116
Accuracy classes 1; 0,5; 0,2s

WSK - Wound current transformer **from page 116**



Busbar 1:	Busbar 2:	Diameter:	Width:	Current range:	Type:	Page:
-	-	-	61 mm	1 ... 20 A	WSK 30	Page 118
-	-	-	71 mm	1 ... 30 A	WSK 40	Page 119
-	-	-	71 mm	30 ... 50 A	WSK 40N	Page 120
-	-	-	71 mm	5 ... 30 A	WSK 60	Page 121
-	-	-	84,5 mm	25 ... 100 A	WSK 70.6	Page 122
-	-	-	136 mm	25 ... 100 A	WSK 70.6N	Page 123
-	-	-	115 mm	25 ... 150 A	WSK 31.5	Page 124

KBR - Split-core current transformer designed for usage around isolated primary conductors **from page 125**



Busbar 1:	Busbar 2:	Diameter:	Width:	Current range:	Type:	Page:
-	-	18,5	36 mm	60 ... 250 A	KBR 18S	Page 126
-	-	18,5	41,6 mm	50 ... 250 A	KBR 18	Page 127
-	-	18,4 mm	49 mm	100 ... 250 A	KBR 18L	Page 128
-	-	27,9 mm	49 mm	200 ... 500 A	KBR 28	Page 129
-	-	32,5 mm	59,2 mm	100 ... 600 A	KBR 32	Page 130
-	-	42,4 mm	67 mm	250 ... 1000 A	KBR 42	Page 131
-	-	2x 42,4 mm	67 mm	250 ... 1000 A	KBR 42L	Page 132
-	-	44 mm	72,2 mm	250 ... 1000 A	KBR 44	Page 133

Low-voltage current transformers for industrial applications — from page 135
Accuracy classes 1; 0,5; 0,2s

KBU - Split-core current transformer **from page 135**



Busbar 1:	Busbar 2:	Diameter:	Width:	Current range:	Type:	Page:
20 x 30 mm	-	20 mm	93 mm	100 ... 400 A	KBU 23	Page 136
50 x 80 mm	-	50 mm	125 mm	250 ... 1000 A	KBU 58	Page 137

Our Product Range

80 x 120 mm	-	80 mm	155 mm	250 ... 1500 A	KBU 812	Page 138
80 x 160 mm	-	80 mm	195 mm	1000 ... 5000 A	KBU 816	Page 139



KSU / SUSK - Summation current transformer **from page 140**

Inputs	Width:	Current range:	Type:	Page:
2 ... 3 Pcs.	127 mm	1 A or 5 A	KSU	Page 143
3 ... 8 Pcs.	156 mm	1 A or 5 A	SUSK	Page 144

NH - Current transformer for fuse disconnector of size 1, 2 and 3 **from page 146**



Busbar 1:	Busbar 2:	Diameter:	Width:	Current range:	Type:	Page:
24 x 6 mm	-	-	52 mm	100 ... 300 A	NH 6.1	Page 148
30 x 6 mm	-	-	60 mm	100 ... 400 A	NH 6.2	Page 149
32 x 6 mm	-	-	74 mm	150 ... 600 A	NH 6.3	Page 150

SASR - Protection Tubular current transformer **from page 151**

Busbar 1:	Busbar 2:	Diameter:	Width:	Current range:	Type:	Page:
-	-	22,5 mm	61 mm	100 ... 300 A	SASR 22.3	Page 154

SASK - Protection plug-in current transformer



Busbar 1:	Busbar 2:	Diameter:	Width:	Current range:	Type:	Page:
20 x 10 mm	-	19,2 mm	61 mm	125 ... 200 A	SASK 21.3	Page 155
20 x 10 mm	-	20 mm	71 mm	100 ... 400 A	SASK 421.4	Page 156
30 x 10 mm	2x 20 x 10 mm	28 mm	61 mm	75 ... 750 A	SASK 31.5	Page 157
30 x 10 mm	20 x 13 mm	23 mm	95 mm	50 ... 750 A	SASK 31.6	Page 158
40 x 10 mm	2x 30 x 5 mm	32 mm	71 mm	100 ... 750 A	SASK 41.4	Page 162
40 x 10 mm	2x 30 x 5 mm	32 mm	86 mm	100 ... 1000 A	SASK 541.4	Page 163
40 x 12 mm	30 x 15 mm	32 mm	95 mm	75 ... 750 A	SASK 41.6	Page 165
40 x 10 mm	-	32 mm	150 mm	75 ... 800 A	SASK 41.10	Page 167
50 x 10 mm	2x 40 x 10 mm	44 mm	86 mm	150 ... 1000 A	SASK 51.4	Page 171
50 x 12 mm	2x 40 x 10 mm	40 mm	95 mm	150 ... 1000 A	SASK 51.6	Page 172
60 x 10 mm	2x 50 x 10 mm	44 mm	96 mm	200 ... 1250 A	SASK 61.4	Page 174
60 x 10 mm	2x 50 x 10 mm	30 mm	150 mm	100 ... 1500 A	SASK 61.10	Page 175
60 x 30 mm	-	30 mm	88 mm	200 ... 1000 A	SASK 63.6	Page 179
120 x 70 mm	-	70 mm	205 mm	600 ... 5000 A	SASK 127.6	Page 180
120 x 90 mm	-	90 mm	250 mm	1000 ... 6000 A	SASK 129.10	Page 180

Low-voltage current transformers for industrial applications — from page 181
Accuracy classes 1; 0,5; 0,2s

ASRD - Three-phase current transformers set **from page 181**



Busbar 1:	Busbar 2:	Diameter:	Width:	Current range:	Type:	Page:
-	-	3x 13,5 mm	105 mm	3x 50 ... 3x 150 A	ASRD 14	Page 182
3x 20 x 5 mm	-	3x 18 mm	115 mm	3x 100 ... 3x 250 A	ASRD 205.37	Page 183
3x 20 x 5 mm	-	3x 18 mm	115 mm	3x 100 ... 3x 250 A	ASRD 205.37 UL	Page 184
3x 30 x 10 mm		3x 22 mm	150 mm	3x 250 ... 3x 600 A	ASRD 310.37	Page 185
3x 30 x 10 mm		3x 22 mm	150 mm	3x 250 ... 3x 600 A	ASRD 310.37 UL	Page 186

Low-voltage current transformers for tariff applications — from page 187
Accuracy classes 0,5; 0,5s; 0,2; 0,2s

EASR - Tubular current transformer **from page 187**

Busbar 1:	Busbar 2:	Diameter:	Width:	Current range:	Type:	Page:
-	-	14 mm	45 mm	75 ... 150 A	EASR 14.3	Page 188
-	-	22,5 mm	61 mm	100 ... 600 A	EASR 22.3	Page 189

EASKL - Plug-in current transformer for fuse switch disconnectors, type InLine II of size 00 + 123 **from page 190**



19 x 12 mm	-	16,4 mm	45 mm	80 ... 160 A	EASKL 19.34	Page 190
31 x 12 mm	-	18,6 mm	60 mm	200 ... 600 A	EASKL 31.34	Page 191

EAS - Plug-in current transformer for fuse switch disconnectors, type SlimLine of size XR01 **from page 192**

Busbar 1:	Busbar 2:	Diameter:	Width:	Current range:	Type:	Page:
17 x 6 mm	-	15,2 mm	45 mm	100 ... 250 A	EAS 176.3	Page 192

Our Product Range

EASK - Plug-in current transformer **from page 193**



Busbar 1:	Busbar 2:	Diameter:	Width:	Current range:	Type:	Page:
17 x 6 mm	-	15,2 mm	45 mm	100 ... 250 A	EASK 176.3	Page 196
20 x 10 mm	-	19,2 mm	61 mm	100 ... 500 A	EASK 21.3	Page 197
30 x 10 mm	2x 20 x 10 mm	26 mm	61 mm	100 ... 750 A	EASK 31.3	Page 198
30 x 10 mm	2x 20 x 10 mm	28 mm	61 mm	100 ... 750 A	EASK 31.4	Page 199
30 x 10 mm	2x 20 x 10 mm	28 mm	61 mm	75 ... 750 A	EASK 31.5	Page 200
30 x 10 mm	20 x 13 mm	23 mm	95 mm	50 ... 750 A	EASK 31.6	Page 203
40 x 10 mm	2x 30 x 5 mm	32 mm	71 mm	100 ... 750 A	EASK 41.4	Page 204
40 x 10 mm	2x 30 x 5 mm	32 mm	86 mm	75 ... 1000 A	EASK 541.4	Page 206
40 x 10 mm	2x 30 x 5 mm	32 mm	71 mm	75 ... 1000 A	EASK 41.5	Page 207
40 x 12 mm	30 x 15 mm	32 mm	95 mm	75 ... 1000 A	EASK 41.6	Page 208
50 x 10 mm	2x 40 x 10 mm	44 mm	86 mm	100 ... 1000 A	EASK 51.4	Page 209
50 x 12 mm	2x 40 x 10 mm	40 mm	95 mm	100 ... 1250 A	EASK 51.6	Page 211
63 x 10 mm	2x 50 x 10 mm	44 mm	96 mm	200 ... 1500 A	EASK 61.4	Page 212
60 x 10 mm	2x 50 x 10 mm	40 mm	95 mm	200 ... 1500 A	EASK 61.6	Page 213
60 x 30 mm	-	30 mm	88 mm	250 ... 1500 A	EASK 63.6	Page 214
80 x 10 mm	2x 60 x 10 mm	55 mm	120 mm	400 ... 1500 A	EASK 81.4	Page 215
100 x 55 mm	-	55 mm	129 mm	600 ... 3000 A	EASK 105.6	Page 216
123 x 30 mm	3x 100 x 10 mm	100 mm	172 mm	750 ... 3000 A	EASK 123.3	Page 217
130 x 25 mm	-	25 mm	180 mm	300 ... 1600 A	EASK 130.3	Page 219
130 x 30 mm	-	30 mm	180 mm	300 ... 3000 A	EASK 130.5	Page 220

Low-voltage current transformers for tariff applications with screwless connection technology „Cage Clamp®“ from page 221
Accuracy classes 0,5; 0,5s; 0,2; 0,2s

ECTB - Plug-in current transformer with screwless connection technology „Cage Clamp®“, UL certificated **from page 221**



Busbar 1:	Busbar 2:	Diameter:	Width:	Current range:	Type:	Page:
30 x 10 mm	25 x 12 mm	25,7 mm	60 mm	100 ... 750 A	ECTB 31.35	Page 222
40 x 10 mm	30 x 15 mm	31,8 mm	70 mm	200 ... 750 A	ECTB 41.35	Page 223
50 x 12 mm	40 x 30 mm	43,7 mm	85 mm	100 ... 1000 A	ECTB 51.35	Page 224
63 x 10 mm	50 x 30 mm	43,7 mm	95 mm	200 ... 1500 A	ECTB 61.35	Page 225
80 x 10 mm	60 x 30 mm	54,7 mm	120 mm	400 ... 2000 A	ECTB 81.35	Page 226
100 x10 mm	80 x 30 mm	70 mm	130 mm	400 .... 2000 A	ECTB 101.35	Page 227

Low-voltage current transformers for tariff applications from page 228
Accuracy classes 0,5; 0,5s; 0,2; 0,2s

EWSK - Wound current transformer **from page 228**



Busbar 1:	Busbar 2:	Diameter:	Width:	Current range:	Type:	Page:
-	-	-	115 mm	25 ... 150 A	EWSK 31.5	Page 229

ESUSK - Summation current transformer

Inputs	Width:	Current range:	Type:	Page:
2 ... 8 Pcs.	156 mm	5 A	ESUSK	Page 230

Low-voltage current transformer for Power Quality application up to 20 kHz from page 231
Accuracy classes 1; 0,5; 0,5s; 0,2; 0,2s

XCTB - Plug-in current transformer with screwless connection system, „Cage Clamp®“ **from page 231**



Busbar 1:	Busbar:	Diameter:	Width:	Current range:	Type:	Page:
30 x 10 mm	25 x 12 mm	25,7 mm	60 mm	50 ... 750 A	XCTB 31.35	Page 237
40 x 10 mm	30 x 15 mm	31,8 mm	70 mm	75 ... 1000 A	XCTB 41.35	Page 239
50 x 12 mm	40 x 30 mm	43,7 mm	85 mm	100 ... 1250 A	XCTB 51.35	Page 241
63 x 10 mm	50 x 30 mm	43,7 mm	95 mm	200 ... 1600 A	XCTB 61.35	Page 243
80 x 10 mm	60 x 30 mm	54,7 mm	120 mm	400 ... 2000 A	XCTB 81.35	Page 245
100 x 10 mm	80 x 30 mm	70 mm	130 mm	400 ... 2000 A	XCTB 101.35	Page 247

XKBU - Split-core current transformers **from page 249**



Busbar 1:	Busbar 2:	Diameter:	Width:	Current range:	Type:	Page:
20 x 30 mm	-	20 mm	93 mm	250 ... 400 A	XKBU 23	Page 249
50 x 80 mm	-	50 mm	125 mm	250 ... 1000 A	XKBU 58	Page 250
80 x 120 mm	-	80 mm	155 mm	250 ... 1500 A	XKBU 812	Page 250
80 x 160 mm	-	80 mm	195 mm	1000 ... 2500 A	XKBU 816	Page 250

Our Product Range



XKBR - Split-core current transformer designed for isolated primary conductors **from page 251**

Busbar 1:	Busbar 2:	Diameter:	Width:	Current range:	Type:	Page:
-	-	18,5 mm	36 mm	200 ... 250 A	XKBR 18S	Page 253
-	-	18,5 mm	41,6 mm	200 ... 250 A	XKBR 18	Page 253
-	-	18,4 mm	49 mm	100 ... 250 A	XKBR 18L	Page 253
-	-	27,9 mm	49 mm	200 ... 500 A	XKBR 28	Page 253
-	-	32,5 mm	59,2 mm	300 ... 600 A	XKBR 32	Page 253
-	-	42,4 mm	67 mm	250 ... 1000 A	XKBR 42	Page 254
-	-	2 x 42,4 mm	67 mm	250 ... 1000 A	XKBR 42L	Page 254
-	-	44 mm	72,2 mm	250 ... 1000 A	XKBR 44	Page 254

Accessories for low-voltage current transformers from page 255

Special current transformers from page 260



ASG - Tube or plug-in current transformers, PU-hardened **from page 260**

Busbar 1:	Busbar 2:	Diameter:	Width:	Current range:	Type:	Page:
-	-	106 mm	190 mm	40 ... 1250 A	ASG 106	Page 261
120 x 30 mm	2x 120 x 10 mm	-	205,3 mm	400 ... 4000 A	ASG 123	Page 263

CTR / CTO - Ring-type or split-core current transformers, fully resin hardened **from page 265**

Busbar 1:	Busbar 2:	Diameter:	Width:	Current range:	Type:	Page:
on request	on request	bis 360 mm	100 ... 500 mm	30 ... 5000 A	CTO	Page 265
on request	on request	bis 360 mm	100 ... 500 mm	30 ... 5000 A	CTR	Page 267

Voltage transformers up to 1 kV from page 269



VTLS / VTLS_L	single-pole insulated, not galvanically isolated	Page 272
VTLD / VTLD_L	double-pole insulated, galvanically isolated	Page 272

All information in this catalogue are without obligation and not-binding. We assume no liability for printing errors.
With appearance of this catalogue all previous have lost their validity.
Our general terms and conditions of business can be found on our website www.mbs-ag.com.

International sales



Europe

- Belgien
- Bulgarien
- Dänemark
- Estland
- Finnland
- Frankreich
- Griechenland
- Großbritannien
- Island
- Italien
- Kroatien
- Liechtenstein
- Litauen
- Luxemburg
- Mazedonien
- Niederlande
- Norwegen
- Österreich
- Polen
- Portugal
- Rumänien
- Russland
- Schweden
- Schweiz
- Serbien
- Slowakei
- Slowenien
- Spanien
- Tschech. Rep.
- Türkei
- Ukraine
- Ungarn

Outside of Europe

- Ägypten
- Australien
- Argentinien
- Brasilien
- Chile
- China
- Costa Rica
- El Salvador
- Guatemala
- Georgien
- Honduras
- Indonesien
- Indien
- Irak
- Israel
- Kolumbien
- Libanon
- Malaysia
- Marokko
- Mexiko
- Neuseeland
- Pakistan
- Peru
- Saudi-Arabien
- Singapur
- Südafrika
- Süd Korea
- Thailand
- Tunesien
- USA
- VAE
- Vietnam

Type explanation for MBS current transformers

Our production mainly comprises low-voltage current transformers up to a max. operating voltage of 0.72 kV acc. IEC 61869/1+2 (formerly IEC 60044-1). The latest versions of the applicable standards apply.

Our delivery programme includes:

Low-voltage current transformers for industry

ASR	**Tubular current transformer**, for primary rated currents from 40 A to 600 A, secondary rated current 5A or 1A, optional secondary switchable, in classes 0.5 and 1, optionally with Cu-tube or snap-on fastening.
AS / ASK	**Plug-in current transformer**, for primary rated currents from 30 A to 7500 A, secondary rated current 5 A or 1 A, optionally double or triple secondary switchable, in the classes 0.2s, 0.5 and 1, without primary conductor, but with base angle, insulating protective cap and rail mounting screws, optional nickel-plated copper rail corresponding to the rail window, including screws DIN 933, complete with nuts, washers and spring washers for mounting in busbars or similar.
ASG	**Tubular current transformer** for primary rated currents from 40 A to 4000 A, secondary rated current 5A or 1 A, accuracy classes 0.2; 0.2s; 0.5; 0.5s and 1, with fixed secondary connection cables, Conductor cross-sections 2.5 / 4 / 6 mm^2, measuring system encapsulated in PU resin. **Tubular rod current transformers** for installation in switchgear; rated current ranges 50 A to 1250 A with up to four integrated measuring systems.
WSK	**Wound current transformer** for primary rated currents 1 A to 150 A, secondary rated current 5 A or 1 A, in classes 0.5 and 1, with primary winding and primary connection terminals instead of one continuous busbar.
KBU	**Split-core current transformer**, for primary rated currents 100 A to 5000 A, secondary rated current 5 A or 1 A, in classes 0.5 and 1, with a divisible measuring system, enable simple, retroactive. Installation in existing systems without additional assembly work. To install, open the locking mechanism of the converter and place it around the primary conductor and audibly locked again. After connecting the secondary cables, the measuring system is ready right away for operation.
KBR	**Split-core current transformer** for primary rated currents from 50 A to 600 A, secondary rated current 1 A, optionally with AC voltage output 0...333 mV, DC output in accuracy classes 3 and 1. To simplify wiring, all transformers are equipped with flexible, fixed secondary outlets 0.75 mm^2, 2.5 m.
KSU / SUSK	**Summation current transformers** for primary rated currents 5 A up to 1 A, secondary rated current 5 A or 1 A, in classes 0.5 and 1. The number following the type designation provides information on the number of the primary circuits to be connected, whereby a maximum of 8 connections are possible
NH	**Current transformer for fuse rails** for primary rated currents 5 A to 1 A, optionally switchable secondary, in class 3, contacting the secondary connections via 4 mm jack plug, for direct mounting on the contact blade strip of low-voltage high-capacity fuses, integrated in NH fuse-link, available in sizes NH 1, NH 2 and NH 3.
SASR / SASK	**Protection current transformers** for primary rated currents 50 A to 2000 A, secondary rated current 5 A or 1 A, in protection classes 5P5, 10P5, 5P10, 10P10, 5P20 and 10P20.
ASRD / ASK(D)/ WSKD / ASKD	**Three-phase current transformer set** for primary rated currents 3 x 50 A to 3 x 750 A, secondary rated current 5 A or 1 A, in classes 0.5 and 1, optional dual secondary switchable.

CTB	**Plug-in current transformer**, UL / CSA-listed, screwless contacting of the secondary connections by means of "cage clamp", for primary rated currents from 50 A to 2500 A; secondary rated currents 5 A or 1 A, accuracy class 0.5 and 1, mounting accessories included.

Special designs manufactured on customer request comply with the technical standards listed above in terms of their design.

Optimisation note on the use of tubular rod and plug-in current transformers for smaller rated currents

For low measuring currents up to approx. 50 A, instead of the normally used wound current transformer, single-phase plug-in current transformers are used. Prerequisite for this is that the primary rated current of the transformer is an integer multiple of the measuring current corresponds. The primary winding is threaded through the primary conductor opening once or several times.

Primary transformer-nominal current A	Number of threadings	Primary transformer nominal current to be measured A
50	1 2 5 10	50 25 10 5
100	1 2 4 5 10 20	100 50 25 20 10 5
150	1 2 3 5 6 10 15	150 75 30 50 25 15 10

Low-voltage current transformers for meter reading

EASR	**Tubular rod current transformers** for primary rated currents from 100 A to 600 A, Secondary rated current 5 A or 1 A, in classes 0.2, 0.5 and 0.5s with type approval by PTB Braunschweig for use for metering purposes.
EAS / EASK	**Plug-in current transformer** for primary rated currents from 50 A to 3000 A, secondary rated current 5 A or 1 A, in classes 0.2, 0.5s and 0.5 with type approval for use for clearing purposes.
EWSK	**Wound current transformer** for primary rated currents from 25 A to 150 A, secondary rated current 5 A or 1 A, in classes 0.2, 0.2s and 0.5 with type approval for use for metering purposes with primary winding and primary connection terminals instead of a primary conductor opening.
ESUSK	**Summation current transformers** for primary rated current 5 A, secondary rated current 5 A, in class 0.2, with type approval for use for metering purposes. The number following the type designation indicates the number of primary circuits, wherein a maximum of 8 connections are possible.
EASK(D) / EWSKD / EASKD	**Three-phase current transformer set**, for primary rated currents 3 x 50 A to 3 x 750 A, secondary rated current 5 A or 1 A, in classes 0.2, 0.5s and 0.5, optionally dual secondary switchable, with type approval for metering purposes, for space-saving installation in energy distribution systems. Transformer set equipped with primary connection busbars and integrated contact hazard protection cover.

Footnote:
All current transformers listed in this catalogue for metering purposes have been type-approved by the Physikalisch Technische Bundesanstalt Braunschweig (PTB). The type approval of the converters is documented by the approval mark affixed to the converter's rating plate. To differentiate between the different versions of our current transformer range, the type designations of our offsetting transformers are preceded by an "E".

Current transformers - Technical terms

Current transformers are special transformers for the proportional conversion of large currents to directly measurable, smaller values. Due to their design and physical operating principle, a safe galvanic isolation between the primary circuit and the measuring circuit is achieved.

Primary rated current	Value of the primary current that characterises the current transformer and for which it is rated.
Secondary rated current	Value of the secondary current that drives the current transformer and for which it is rated.
Measured burden	Value of the apparent power (in [VA] at a fixed power factor) that the transformer can deliver to the secondary circuit at the secondary rated current and rated burden.
Measuring ratio	Ratio of the primary rated current to the secondary rated current. The rated ratio of a current transformer is shown on the rating plate as an unabridged breakage specified.
Burden	Impedance of the secondary circuit, expressed in ohms with specification of the power factor.
Measured burden	Value of the burden on which the accuracy specifications of the current transformer are based.
Rated frequency	Value of the frequency on which the rating of the current transformer is based.
Accuracy class	Specification for a current transformer that its measurement deviations are below the specified accuracy class.
Error angle [δ]	Angular difference between the primary and secondary current pointer. The direction of the pointer is selected so that the error angle is zero for an ideal current transformer.
Current measurement deviation	Measurement deviation caused by a current transformer when measuring a current and which results from the fact that the actual ratio deviates from the rated ratio. The current measurement deviation expressed as a percentage is calculated using the following formula: $F_i[\%] = \frac{(K_n I_s - I_p) \times 100}{I_p}$ F_i = Current measurement deviation in % K_n = Nominal transmission ratio I_p = actual primary current I_s = actual current when I_p flows under measurement conditions
Highest voltage for operating materials U_m	Effective value of the highest conductor-conductor voltage for which a measuring transformer is rated with regard to its insulation is measured.

Total measuring deviation	In steady state, the effective value of the difference between: a) the instantaneous values of the primary current and b) the instantaneous values of the actual gear ratio multiplied by the rated gear ratio secondary current, whereby the positive signs of the primary and secondary current of the agreement for the connection designations. The total measurement deviation F_G is generally expressed as a percentage of the effective values of the primary measurement as follows F_G: $F_g = \frac{100}{Ip} x \sqrt{\frac{1}{T} x \int_0^T (Kn\ is - ip)2\ dt}$ K_n = Rated transmission ratio I_p = Effective value of the primary current i_p = Instantaneous value of the primary current i_s = Instantaneous value of the secondary current T = Period duration
Rated-/Limiting current [I_{pl}]	Value of the lowest primary current at which, with the secondary rated load, the total measurement deviation of the current transformer is equal to or greater than 10%.
Overcurrent /limiting factor (FS)	Ratio of the rated limiting current to the primary rated current.
Thermal dimensioning continuous current [I_{cth}]	Value of the continuous current in the primary winding at which the overtemperature exceeds the value specified in the standard. Value is not exceeded, whereby the secondary winding is loaded with the rated burden.
Thermal dimensioning short-term current [I_{th}]	Effective value of the primary current to which the current transformer is subjected for a period of 1 second with short-circuited secondary winding without damage.
Rated impulse current [I_{dyn}]	Peak value of the primary current, the electromagnetic force of which the current transformer is able to convert at short-circuited secondary winding without electrical and mechanical damage.
"Open circuit voltage" from current transformers	A current transformer operated open on the secondary side induces the following at its secondary terminals very high peak voltage values. The amounts of these voltages can vary depending on the current transformer, values of up to several kilovolts can be achieved and thus represent a danger to persons and the functional safety of the converter. For safety reasons, as well as for the prevention of magnetisation of the core iron during open secondary operation, open operation should generally be avoided.
Earthing of secondary terminals	According to DIN VDE 0141 (01/2000) paragraph 5.3.4, current and voltage transformers for nominal voltages from U_m = 3.6 kV must be earthed on the secondary side. For low voltage ($U_m \leqq$ 1.2 kV) grounding is not required if the converter housings do not have any large metal surfaces that can be touched.
Primary busbar cross-sections	The geometric dimensions of the primary conductor openings of our current transformers are only relevant to a limited extent for the actual design of the rated current ranges. The busbar cross-section may be smaller in the area of the primary conductor feed-through of the transformer if it is ensured that the excess temperature caused by this is safely dissipated via the connection cross-sections of the adjacent busbars.
Special versions	- Saturation current transformers — on request - Tropicalised versions — on request - Primary rated currents deviating from preferred values — on request - Deviating rated frequencies (16 ⅔ up to 400 Hz) — on request - Transformers for increased mechanical load capacity (vibration protection) — on request

MBS current transformer range for metering

In addition to an extensive range of standard current transformers in accuracy classes 0.5 and 1, MBS AG manufactures a wide range of billing current transformers for current ranges from 25 A to 3000 A in accuracy classes 0.2S, 0.2, 0.5S and 0.5.

These type-approved current transformers have national approvals in Germany and other European countries.
The transducers approved by the Physikalisch Technische Bundesanstalt (PTB) Braunschweig can be recognised by a stylised type and model number. The usual MBS type designation is additionally preceded by an Ƨ

The calibration of the transducers is documented by an official security stamp (seal) and an additional yellow calibration mark (main stamp). The fees charged for calibration are based on the applicable official calibration cost regulations.

On request, the current transformers can be calibrated by the **"Staatlich anerkannte Prüfstelle für Messgeräte für Elektrizität EA90"** (State-approved testing centre for electrical measuring instruments EA90), which is operated by MBS AG.

MBS low-voltage current transformer version

All low voltage current transformers manufactured at MBS AG comply with DIN VDE 0414/1, DIN 42600, DIN EN 60044/1 version 12, 2003, and regulation VBG 4.

The current transformers have the following properties:

- Unbreakable plastic housing
- Polycarbonate black
- flame retardant
- self-extinguishing
- Transducer housing ultrasonically welded
- Nickel-plated secondary terminals with plus-minus screw M 5 x 8 mm nickel-plated, tightening torque max. 2 Nm
- Integrated secondary sealing flap
- Connection cross section: max. 4 mm² with wire end ferrule, 6 mm² solid.

Foot bracket and rail fastening screws with insulating cap (touch-proof) are included in the scope of delivery.
All transformers are suitable for use on solid primary conductors as well as on flexible, insulated copper tape.

Insulation protection cap

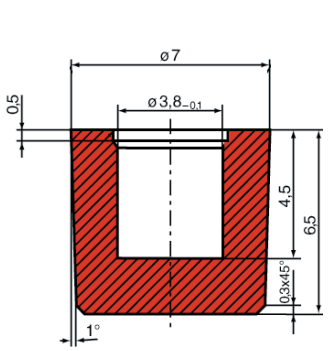

Busbar mounting screw,
screw length (L) 25, 32, 36, 46, 54, 80 mm, torque 0,5 Nm

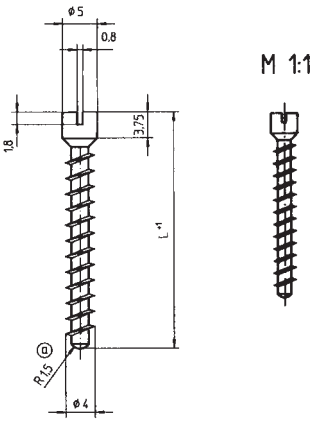

General technical data:

Rated frequency	50(60)Hz (16 ⅔ up to 400 Hz upon request)
Highest voltage for operating equipment	$U_m \leqq 0.72$ kV $U_m \leqq 1.2$ kV (Type series CTB, ASK 165.5, ASK 205.5, ASG 106, ASG 123)
Insulation class	E
Insulation test voltages	3 kV, 1 min, $U_{eff,}$ 50 Hz ($U_m \leqq 0.72$ kV) 6 kV, 1 min, U_{eff}, 50 Hz ($U_m \leqq$ 1.2 kV)
Thermal rated continuous current (higher values on request)	$I_{cth} = 1{,}0 \times I_{pr}$ (higher values upon request) $I_{cth} = 1{,}2 \times I_{pr}$ (types EASK and CTB)
Thermal rated short time current	$I_{th} = 60 \times I_{pr}$ 1 sec. (max. 100 kA)(types ASK, ASR, EASK, EASR, KBU, KBR, CTB) $I_{th} = 40 \times I_{pr}$ 1 sec. (max. 100 kA)(types WSK, KSU, SUSK)
Rated surge current	$I_{dyn} = 2{,}5 \times I_{th}$
Overcurrent limiting factor	FS 5 to FS 15 (for exact details see rating plate)
Working temperature range	–5 °C$\leqq \vartheta \leqq$ +50 °C / –25 °C$\leqq \vartheta \leqq$ +50 °C
Storage temperature range	–25 °C$\leqq \vartheta \leqq$ +70 °C
Applied standards	DIN EN 61869/ 1+2 DIN 42600-1 edition 10/2013 DIN 42600-2 edition 10/2013

Operating instructions

The installation of current transformers and the current transformers to be connected to them measuring devices may only be used when the system is disconnected.
The current transformers are wired under the following connection diagrams. When operating the current transformer with an open secondary circuit voltages at the secondary terminals can be dangerous to humans.

An "open" operation of the secondary circuit of current transformers is prohibited. Before replacing measuring devices in the secondary circuit of the current transformer, short-circuit its secondary connections.

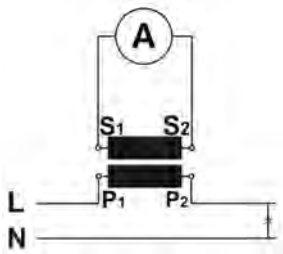

Measuring circuit

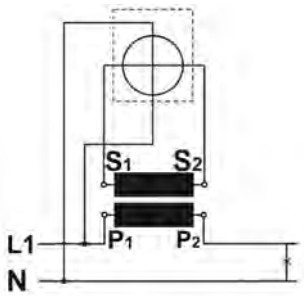

Single-phase current transformer meter circuit

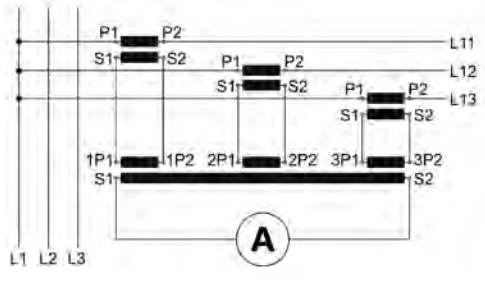

Summation current transformer circuit for phase 1

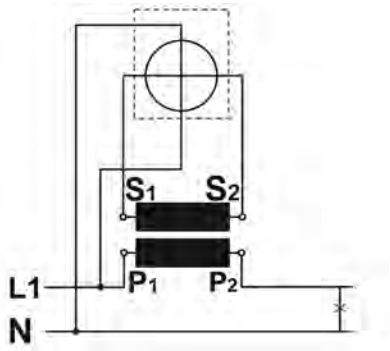

Multiphase current transformer meter circuit

Error limit values of class 0.2 … 3 according to DIN IEC 61869/ 1+2

Accuracy class	Current error ± Δ_F at					Phase displacement error ± Δ_F at				
	1.2 I_n 1.0 I_n	0.2 I_n	0.1 I_n	0.05 I_n	0.01 I_n	1.2 I_n 1.0 I_n	0.2 I_n	0.1 I_n	0.05 I_n	0.01 I_n
	%	%	%	%	%	min	min	min	min	min
0.2	0.2	0.35		0.75		10	15		30	
0.2s	0.2	0.2		0.35	0.75	10	10		15	30
0.5	0.5	0.75		1.5		30	45		90	
0.5s	0.5	0.5		0.75	1.5	30	30		45	90
1	1	1.5		3		60	90		180	
3	3 *									

* at 0.5 I_n and thermal nominal continuous current

Error limit values of the current transformer for protection purposes

Accuracy class	Current error ± F_i at	Phase displacement error ± F_i at
	1.0 I_n and thermal nominal continuous current	1.0 I_n and thermal nominal continuous current
	%	minutes
5P...	1	60
10P...	3	

Total error F_g at nominal rated error limit current and nominal burden class 5P … ≦ 5 %
class 10P … ≦ 10 %

Current carrying capacity of copper busbar dimensions and current values acc. DIN 43671

Busbar cross section	1 busbar	2 busbars	3 busbars
20 x 10	427 A	825 A	1,180 A
30 x 05	379 A	672 A	896 A
30 x 10	573 A	1060 A	1,480 A
40 x 05	482 A	836 A	1,090 A
40 x 10	715 A	1290 A	1,770 A
50 x 10	852 A	1510 A	2,040 A
60 x 10	985 A	1720 A	2,300 A
80 x 10	1240 A	2110 A	2,790 A
100 x 10	1490 A	2480 A	3,260 A
Busbar surface		Clear	

Above mentionened values are applicable for continuous current load at approximately 30 °C ambient temperature.

Designations of the current transformer connection terminals

The connections of all primary windings are labelled with capital letters "K-P_1" and "L-P_2", the connections of all secondary windings are labelled with the corresponding lower case letters "k-s_1" and "l-s_2".
For current transformers with several secondary taps, the winding end is marked "l" followed by the prefix "l_1", the taps with a decreasing number of turns are sequentially numbered to "2"; "3" etc.

For summation current transformers with several input circuits, the capital letters "A," "B," "C," are placed in front of the usual terminal designations "K" or "L" to clearly distinguish them. For summation current transformers designed for the connection of different main transformers, the main transformer with the highest transformation ratio is connected to the lowest indexed terminal pair ("Akk"-"AL"). The correct connection assignment can also be found on the rating plate, which bears an entry on the ratio of the individual rated currents of the main transformers.

Example:

Main current transformer 1: 300/5A
Main current transformer 2: 150/5A --> Information on the rating plate: **6_A**:**3_B**:**2_C**
Main current transformer 2: 100/5A

Error curves of low voltage current transformers

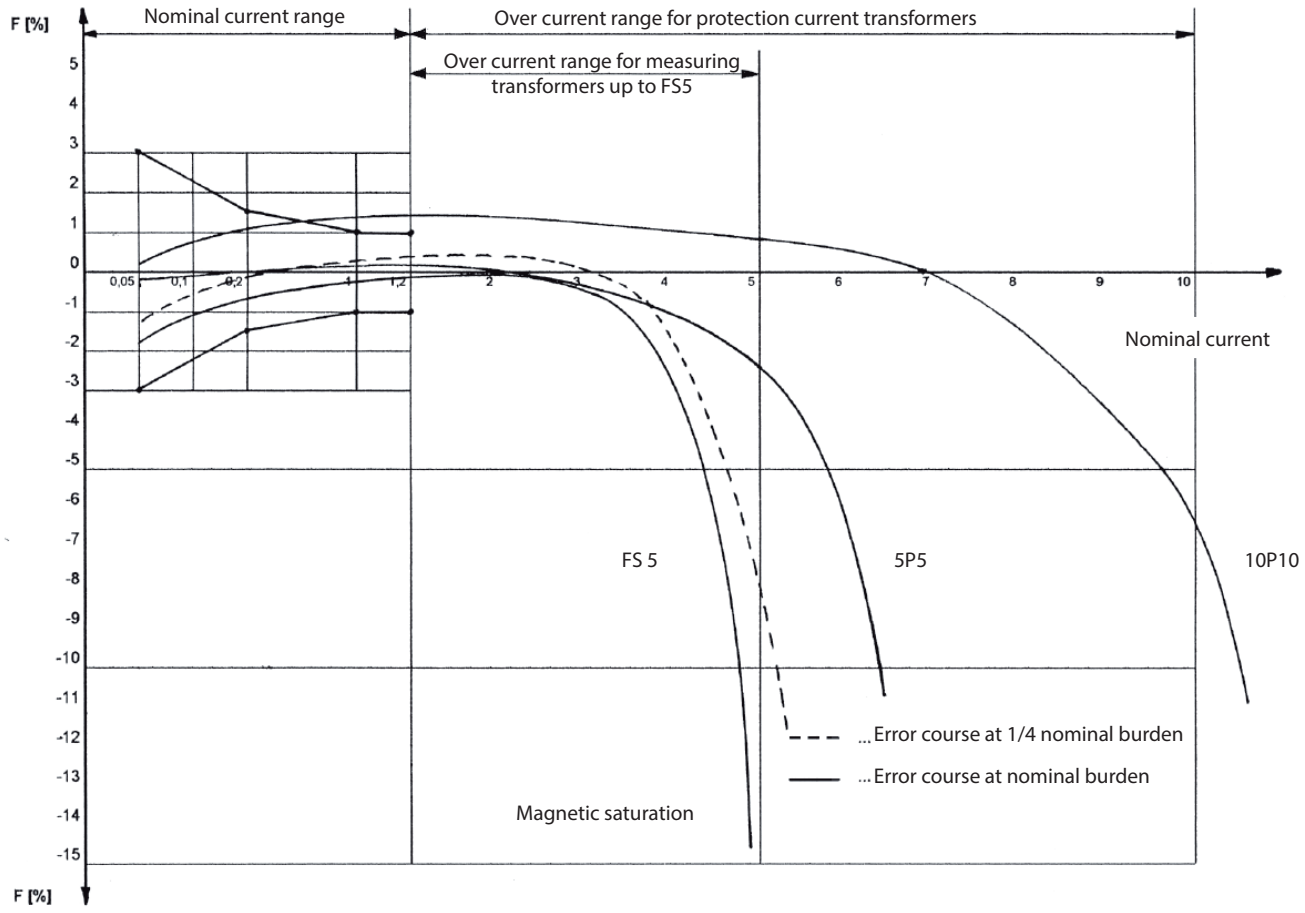

Power requirements of measuring devices and relays

When using current transformers, the user has the following two main requirements:

- High measuring accuracy in the nominal current range
- Protective function in the overcurrent range

To realise these requirements, it is necessary that the power supply (the nominal apparent power) of the current transformer is adapted as far as possible to the actual power requirement of the measuring system.
In order to determine the actual power requirement, in addition to the power required by the connected measuring devices, the line losses of the measuring lines connected to the secondary circuit of the transformer must also be taken into account.

For the accomplishment of the demands it is necessary that the assumed nominal power of the current transformer is largely adapted to the actual power requirements of the measuring set up. For the appraisal of the actual power requirements, apart of the own power consumption requirements of the connected measuring units, also the conductor losses must be considered which are connected to the secondary circuit of the transformer measuring conductors.

Intrinsic power requirement of typical measuring devices

Current meter soft iron up to 100 mm Ø	0.7000 -	1.5 VA
Rectifier current meter	0.001 -	0.25 VA
Multi range current meter	0.005 -	5.0 VA
Current recorder	0.300 -	9.0 VA
Bimetal-current meter	2.500 -	3.0 VA
Power meter	0.200 -	5.0 VA
Power recorder	3.000 -	12.0 VA
Power meter	2.000 -	6.0 VA
Power recorder	9.000 -	16.0 VA
Meter	0.400 -	1.0 VA
Relay N-Relay	0.200 -	14.0 VA
Overcurrent-Relay	3.000 -	6.0 VA
Overcurrent time-Relay	-	6.0 VA
Direction-Relay	7.000 -	10.0 VA
Bimetal-Relay	1.000 -	11.0 VA
Distance-Relay	0.200 -	30.0 VA
Differential-Relay		2.0 VA
	1.000	15.0 VA
Current transformer trip switch	5.000 -	150.0 VA
Controller	5.000 -	180.0 VA

Self-consumption of copper cables

$$P_V = \frac{I_S^2 \times 2 \times l}{A_{CU} \times 56} \text{ VA}$$

I_s = Secondary rated current [A]
l = Simple cable length in metres
A_{cu} = Conductor cross-section in mm²
P_v = Power loss of the connection cables

Note: With a common three-phase return line, half the values of P_v.

Table for values related to 5 A

Nominal cross section	1 m	2 m	3 m	4 m	5 m	6 m	7 m	8 m	9 m	10 m
2.5 mm²	0.36	0.71	1.07	1.43	1.78	2.14	2.50	2.86	3.21	3.57
4.0 mm²	0.22	0.45	0.67	0.89	1.12	1.34	1.56	1.79	2.01	2.24
6.0 mm²	0.15	0.30	0.45	0.60	0.74	0.89	1.04	1.19	1.34	1.49
10.0 mm²	0.09	0.18	0.27	0.36	0.44	0.54	0.63	0.71	0.80	0.89

Table for values based on 1 A

Nominal cross section	10 m	20 m	30 m	40 m	50 m	60 m	70 m	80 m	90 m	100 m
1.0 mm²	0.36	0.71	1.07	1.43	1.78	2.14	2.50	2.86	3.21	3.57
2.5 mm²	0.14	0.29	0.43	0.57	0.72	0.86	1.00	1.14	1.29	1.43
4.0 mm²	0.09	0.18	0.27	0.36	0.45	0.54	0.63	0.71	0.80	0.89
6.0 mm²	0.06	0.12	0.18	0.24	0.30	0.36	0.42	0.48	0.54	0.60
10.0 mm²	0.04	0.07	0.11	0.14	0.18	0.21	0.25	0.29	0.32	0.36

Low-voltage current transformers for industrial applications

Mini current transformer

CTM 7

Round conductor: 7,6 mm Current range: 32 ... 64 A
Transformer width: 27,5 mm

Page: 20



CTM 7

Mini current transformer



Round conductor	7,6 mm
Transformer width	27,5 mm
Height	46,5 mm
Depth	19,0 mm

Primary current [A]	Burden [VA]	Secondary current [A] / Class 1 A Cl. 1 FS5 Art.-no.
32	0,2	77001
35	0,2	77002
40	0,3	77003
50	0,4	77004
60	0,4	77005
64	0,5	77006

		Art.-no.
	**Snap-on mounting, type J**	**55018**
	**Sealed shutter**	**–**

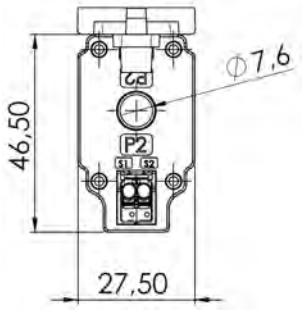

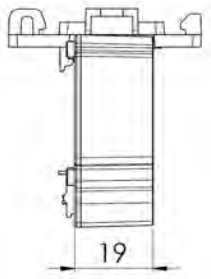

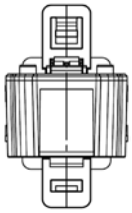

Low-voltage current transformers for industrial applications

Tubular current transformer

ASR 14.3 — Round conductor: 14 mm — Transformer width: 45 mm — Current range: 30 ... 150 A — Page: 22

ASR 20.3 — Round conductor: 21 mm — Transformer width: 45 mm — Current range: 50 ... 300 A — Page: 23

ASR 201.3 — Round conductor: 21 mm — Transformer width: 44 mm — Current range: 60 ... 300 A — Page: 24

ASR 21.3 — Round conductor: 22,8 mm — Transformer width: 49,5 mm — Current range: 100 ... 500 A — Page: 25

ASR 21.5 — Round conductor: 21,2 mm — Transformer width: 50 mm — Current range: 50 ... 600 A — Page: 26

ASR 22.3
ASR 22.3 2U — Round conductor: 22,5 mm — Transformer width: 61 mm — Current range: 50 ... 600 A — Page: 27

ASR 42.45 — Round conductor: 42 mm — Transformer width: 71 mm — Current range: 150 ... 800 A — Page: 29

Tubular current tranformer, resin hardened

ASG 210.3 — Round conductor: 20,8 mm — Transformer width: 44 mm — Current range: 60 ... 300 A — Page: 30

ASR 14.3

Tubular current transformer



Current transformer designed for integrated installation into fuse switch disconnectors, type SlimeLine of size XR00.

Round conductor	14 mm
Transformer width	45 mm
Height	65 mm
Depth	30 mm

		Secondary current [A] / Class			
Primary current [A]	Burden [VA]	5 A Cl. 3 Art.-no.	5 A Cl. 1 Art.-no.	1 A Cl. 3 Art.-no.	1 A Cl. 1 Art.-no.
30	1	26088		26290	
40	1		26081		26281
50	1		26085		26285
	1,5		26082		26282
60	1,5		26083		26283
75	1,5		26084		26284
100	2,5		26094		26294
125	2,5		26087		26287
150	2,5		26095		26295

		Art.-no.
	**Snap-on mounting, type E**	**55013**
	**Sealed shutter**	**–**

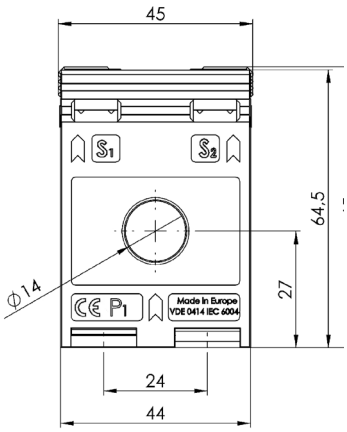

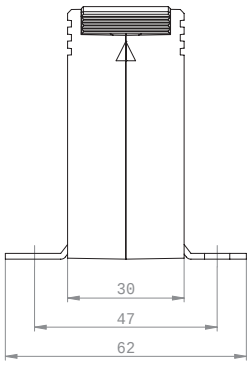

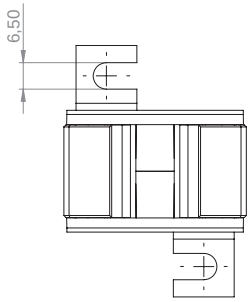

ASR 20.3

Tubular current transformer



Current transformer designed for integrated installation into fuse switch disconnectors, type SlimeLine of size XR00/1.

Round conductor	21 mm
Transformer width	45 mm
Height	65 mm
Depth	30 mm

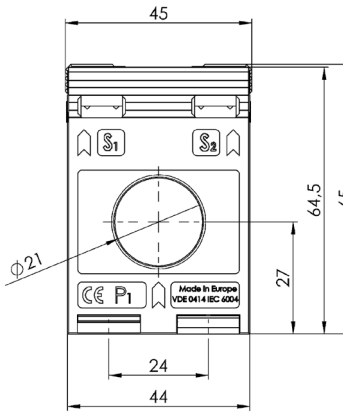

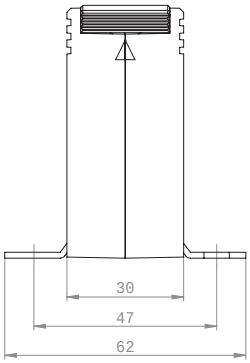

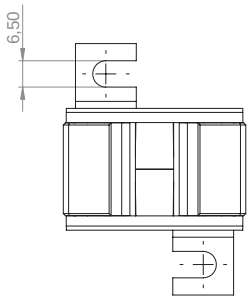

	Secondary current [A] / Class			
Primary current [A]	Burden [VA]	5 A Cl. 1 Art.-no.	5 A Cl. 0,5 Art.-no.	1 A Cl. 1 Art.-no.	1 A Cl. 0,5 Art.-no.
50	1	26027		26227	
60	1	26028		26228	
	1,25	26029		26229	
75	1,25	26030		26230	
	1,5	26031		26231	
80	1,25	26032		26232	
	1,5	26033		26233	
100	1,5	26034	26011	26234	26211
	2,5	26035		26235	
125	1,5	26036	26013	26236	26213
	2,5	26037		26237	
150	1,5	26039	26015	26239	26215
	2,5	26040	26016	26240	26216
	3,75	26041		26241	
200	1,5	26042	26017	26242	26217
	2,5	26043	26018	26243	26218
	3,75	26051			
250	2,5	26045	26020	26245	26220
	5	26046		26246	26221
300	2,5	26048	26022	26248	26222
	5	26049	26023	26249	

		Art.-no.
	**Snap-on mounting, type E**	**55013**
	**Sealed shutter**	**–**

ASR 201.3

Tubular current transformer



Round conductor	21 mm
Transformer width	44 mm
Height	64,5 mm
Depth	30 mm

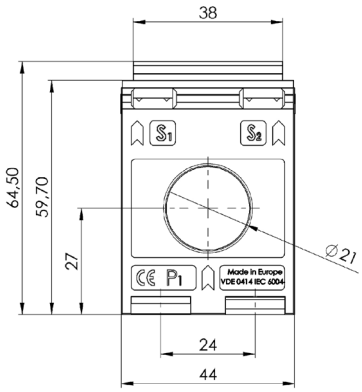

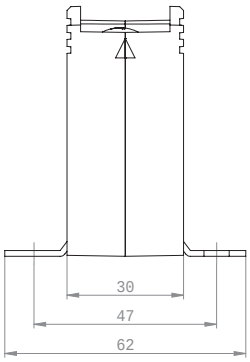

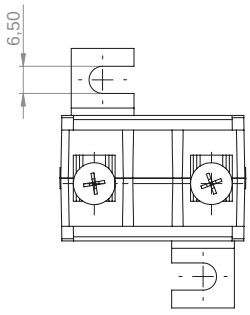

	Secondary current [A] / Class			
Primary current [A]	Burden [VA]	5 A Cl. 1 Art.-no.	5 A Cl. 0,5 Art.-no.	1 A Cl. 1 Art.-no.	1 A Cl. 0,5 Art.-no.
60	1	27028			
75	1,25	27030		27230	
	1,5	27031		27231	
80	1,25	27032		27232	
	1,5	27033		27233	
100	1,5	27034	27011	27234	27211
	2,5	27035		27235	
125	1,5	27036	27013	27236	27213
	2,5	27037	27014	27237	
150	1,5	27039	27015	27239	27215
	2,5	27040	27016	27240	
	3,75	27041		27241	
200	1,5	27042	27017	27242	27217
	2,5	27043	27018	27243	27218
	3,75	27052		27252	
	5	27044			
250	2,5	27045	27020	27245	27220
	5	27046		27246	
300	2,5	27048	27022	27248	27222
	5	27049		27249	

		Art.-no.
	**Snap-on mounting, type E**	**55013**
	**Sealed shutter**	**–**



ASR 21.3

Tubular current transformer

		Secondary current [A] / Class	
Primary current [A]	Burden [VA]	5 A Cl. 1 Art.-no.	1 A Cl. 1 Art.-no.
100	1	1023	1223
150	1,5	1024	1224
200	1,5	1026	1226
	2,5	1027	1227
250	1,5	1028	1228
	2,5	1029	1229
	3,75	1048	1248
	5	1030	
300	1,5	1031	1231
	2,5	1032	1232
	3,75	1049	1249
	5	1033	
400	2,5	1034	1234
	5	1035	1235
500	2,5	1037	1237
	5	1038	1238

Round conductor	22,8 mm
Transformer width	49,5 mm
Height	65 mm
Depth	35 mm

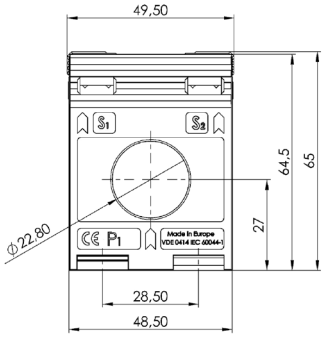

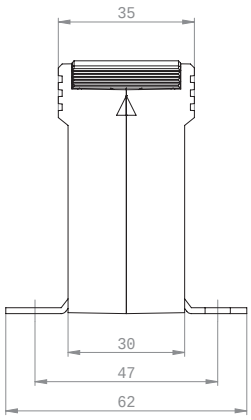

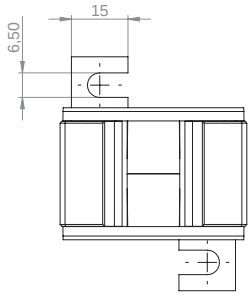

		Art.-no.
	**Snap-on mounting, type F**	**55014**
	**Sealed shutter**	**–**

ASR 21.5

Tubular current transformer



Round conductor	21,2 mm
Transformer width	49,9 mm
Height	70 mm
Depth	55 mm

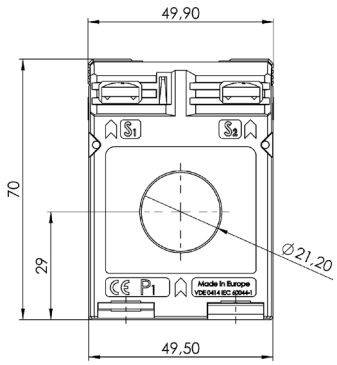

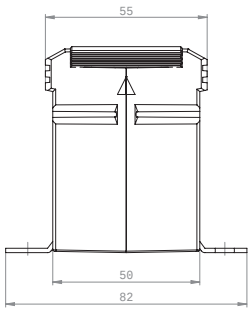

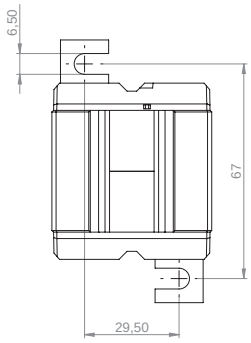

	Secondary current [A] / Class			
Primary current [A]	Burden [VA]	5 A Cl. 1 Art.-no.	5 A Cl. 0,5 Art.-no.	1 A Cl. 1 Art.-no.	1 A Cl. 0,5 Art.-no.
50	1,5	93050	93011	93250	
60	1,5	93052	93012	93252	93212
	2,5	93053		93253	
	3,75			93254	
75	1,5	93055	93013	93255	93213
	2,5	93056		93256	
	3,75	93057		93257	
80	1,5	93058	93014	93258	93214
	2,5	93059		93259	
100	1,5	93061	93015	93261	93215
	2,5	93062	93016	93262	93216
	5	93063		93263	
125	1,5	93064	93017	93264	93217
	2,5	93065	93018	93265	93218
	5	93066		93266	
150	2,5	93067	93019	93267	93219
	5	93068	93020	93268	93220
	7,5	93095		93294	
200	2,5	93070	93021	93270	93221
	5	93071	93022	93271	93222
	10	93072	93023	93272	93223
250	2,5	93074	93024	93274	93224
	5	93075	93025	93275	93225
	10	93076		93276	
300	2,5	93078	93027	93278	93227
	5	93079	93028	93279	93228
	10	93080	93029	93280	93229
400	2,5	93082	93031	93282	93231
	5	93083	93032	93283	93232
	10	93084	93033	93284	93233
500	2,5	93086	93035	93286	93235
	5	93087	93036	93287	93236
	10	93088	93037	93288	93237
600	2,5	93090	93039	93290	93239
	5	93091	93040	93291	93240

		Art.-no.
	**Snap-on mounting**	–
	**Sealed shutter**	–



ASR 22.3

Tubular current transformer

Round conductor	22,5 mm
Transformer width	61 mm
Height	75,5 mm
Depth	35 mm

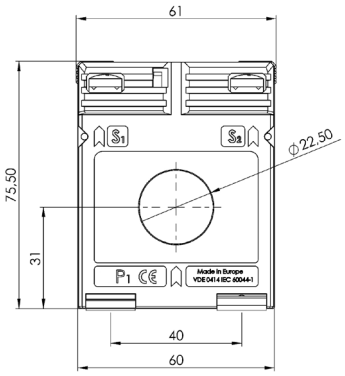

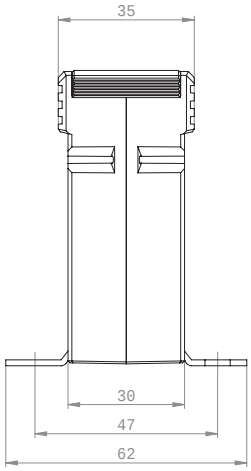

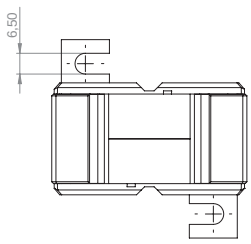

		Secondary current [A] / Class				
Primary current [A]	Burden [VA]	5 A Cl. 1 Art.-no.	5 A Cl. 0,5 Art.-no.	5 A Cl. 0,2s Art.-no.	1 A Cl. 1 Art.-no.	1 A Cl. 0,5 Art.-no.
50	1	3035			3235	
	1,5				3236	
60	1	3037			3237	
	1,5	3038			3238	
75	1,5	3039			3239	
	2,5	3040			3240	
80	1,5	3041			3241	
	2,5	3042			3242	
100	1,5	3043	3011		3243	3211
	2,5	3044	3134		3244	3334
	3,75	3045			3245	
150	1,5	3046	3012	V04-1604C	3246	3212
	2,5	3047	3013	V04-1604D	3247	3213
	5	3048			3248	
200	1,5		3014			3214
	2,5	3049	3015	V04-1704D	3249	3215
	5	3050	3016	V04-1704F	3250	3216
	10	3051				
250	2,5	3052	3018	V04-1804D	3252	3218
	5	3053	3019	V04-1804F	3253	3219
	10	3054			3254	
300	2,5	3056	3022	V04-1904D	3256	3222
	5	3057	3023	V04-1904F	3257	3223
	10	3058	3024		3258	3224
	15				3259	
400	2,5	3060	3025	V04-2004D	3260	3225
	5	3061	3026	V04-2004F	3261	3226
	10	3062	3027		3262	3227
	15	3063			3263	
500	2,5	3064	3028	V04-2104D	3264	3228
	5	3065	3029	V04-2104F	3265	3229
	10	3066	3030	V04-2104H	3266	3230
600	2,5	3068	3031	V04-2204D	3268	3231
	5	3069	3032	V04-2204F	3269	3232
	10	3070	3033	V04-2204H	3270	3233

		Art.-no.
	**Snap-on mounting, type A**	**53011**
	Sealed shutter, type A	**59040**

ASR 22.3 2U

Tubular current transformer, secondary reconnectable



Round conductor	22,5 mm
Transformer width	61 mm
Height	75,5 mm
Depth	35 mm

		Secondary current [A] / Class	
Primary current [A]	Burden [VA]	5 A Cl. 1 Art.-no.	1 A Cl. 1 Art.-no.
200-100	5-2,5	3111	3311
300-150	5-2,5	3112	3312
	10-5	3113	3313
400-200	5-2,5	3114	3314
	10-5	3115	3315
500-250	5-2,5	3116	3316
	10-5	3117	3317
600-300	5-2,5	3118	3318
	10-5	3119	3319

		Art.-no.
	**Snap-on mounting, type A**	**53011**
	**Sealed shutter, type A**	**59040**

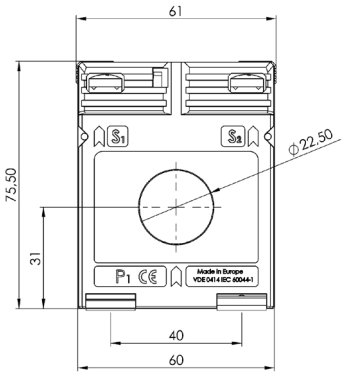

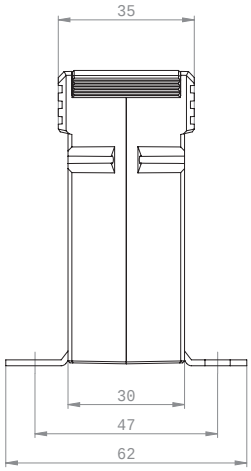

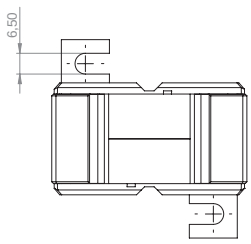

ASR 42.45

Tubular current transformer



Round conductor	42 mm
Transformer width	71 mm
Height	71 mm
Depth	45 mm

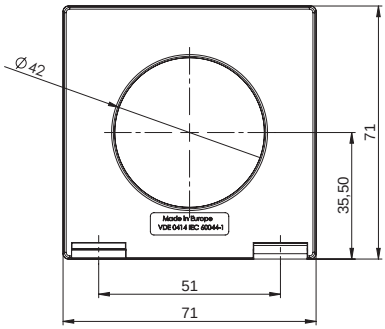

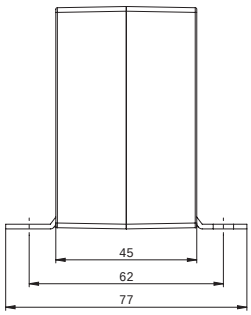

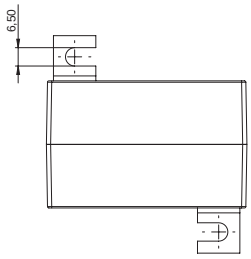

	Secondary current [A] / Class	
Primary current [A]	Burden [VA]	5 A Cl. 1 Art.-no.	1 A Cl. 1 Art.-no.
150	1,5	26500	26600
	2,5	26501	26601
200	1,5	26502	26602
	2,5	26503	26603
	5	26504	26604
250	1,5	26505	26605
	2,5	26506	26606
	5	26507	26607
	7,5	26508	
300	2,5	26509	26609
	5	26510	26610
	7,5	26536	26644
400	2,5	26512	26612
	5	26513	26613
	10	26514	26614
500	2,5	26515	26615
	5	26516	26616
	10	26517	26617
600	2,5	26519	26619
	5	26520	26620
	10	26521	26621
	15		
750	2,5	26523	26623
	5	26524	26624
	10	26525	26625
	15		
800	5	26527	26627
	10	26528	26628

		Art.-no.
	**Snap-on mounting**	–
	**Sealed shutter**	–

- Connection cable 2,5 mm², 400 mm long (standard)
- The ends of the cables are equipped with ferrules.

ASG 210.3

Tubular current transformer, resin hardened



Round conductor	20,8 mm
Transformer width	44 mm
Height	55,5 mm
Depth	30 mm

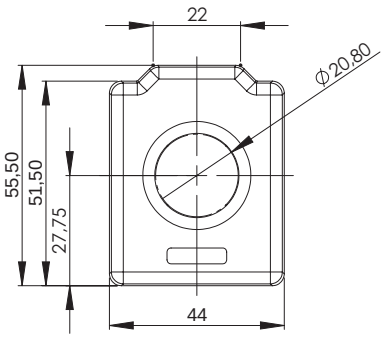

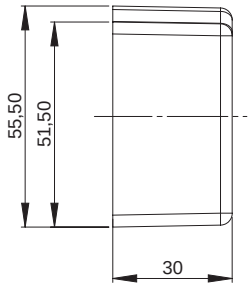

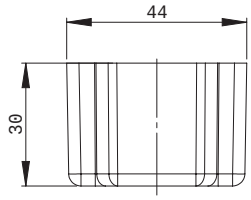

	Secondary current [A] / Class	
Primary current [A]	Burden [VA]	5 A Cl. 1 Art.-no.	1 A Cl. 1 Art.-no.
60	1	27501	27601
	1,25		27602
75	1,25	27503	27603
	1,5	27504	27604
80	1,25	27505	27605
	1,5	27506	27606
100	1,5	27507	27607
	2,5	27508	27608
125	1,5	27509	27609
	2,5	27510	27610
150	1,5	27512	27612
	2,5	27513	27613
	3,75	27514	27614
200	1,5	27515	27615
	2,5	27516	27616
	3,75	27527	27627
	5		27617
250	2,5	27518	27618
	3,75	27528	27628
	5	27519	27619
300	2,5	27521	27621
	5	27522	27622
	7,5		27623

		Art.-no.
	**Snap-on mounting**	–
	**Sealed shutter**	–

- Connection cable 2,5 mm², 400 mm long (standard)
- The ends of the cables are equipped with ferrules.

Low-voltage current transformers for industrial applications

Plug-in current transformer for fuse switch disconnectors

ASKL 19.34
InLine II, size 00
Round conductor: 16,4 mm Current range: 80 ... 160 A Page: 32
Transformer width: 45 mm

ASKL 31.34
InLine II, size 123
Round conductor: 18,6 mm Current range: 250 ... 600 A Page: 33
Transformer width: 60 mm

AS 176.3
SlimLine, size XR1
Round conductor: 15,2 mm Current range: 75 ... 250 A Page: 34
Transformer width: 45 mm

ASKL 19.34

Plug-in current transformer



Current transformer designed for integrated installation into fuse switch disconnectors, type InLine II of size 00.

Busbar 1	19 x 12 mm
Round conductor	16,4 mm
Transformer width	45 mm
Height	65 mm
Depth	34 mm

		Secondary current [A] / Class			
Primary current [A]	Burden [VA]	5 A Cl. 1 Art.-no.	5 A Cl. 0,5 Art.-no.	1 A Cl. 1 Art.-no.	1 A Cl. 0,5 Art.-no.
80	1	34-0001	34-0019		34-2022
	1,5			34-2002	
100	1		34-0020		
	1,5	34-0003			34-2024
	2			34-2005	
120	1,5		34-0022	34-2007	34-2026
	2	34-0006			
	2,5			34-2009	
125	1,5		34-0024		34-2028
	2	34-0009			
	2,5	34-0010		34-2013	
150	1,5		34-0026		34-2030
	2	34-0013	34-0027		34-2031
	2,5	34-0014		34-2017	
160	1,5		34-0029		
	2	34-0017	34-0030		
	2,5	34-0018		34-2021	34-2035

		Art.-no.
	**Snap-on mounting**	–
	**Sealed shutter**	–

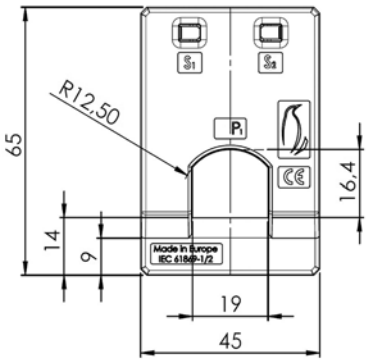



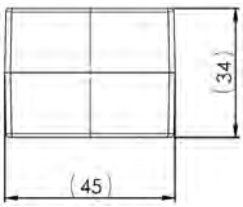

ASKL 31.34

Plug-in current transformer



Current transformer designed for integrated installation into fuse switch disconnectors, type InLine II of size 123.

Busbar 1	31 x 12 mm
Round conductor	18,6 mm
Transformer width	60 mm
Height	63 mm
Depth	34 mm

		Secondary current [A] / Class					
Primary current [A]	Burden [VA]	5 A Cl. 1 Art.-no.	5 A Cl. 0,5 Art.-no.	5 A Cl. 0,5s Art.-no.	1 A Cl. 1 Art.-no.	1 A Cl. 0,5 Art.-no.	1 A Cl. 0,5s Art.-no.
250	2,5			34-0140			34-2140
	3,75	34-0103	34-0123			34-2123	
	5				34-2104		
300	3,75		34-0126	34-0143		34-2126	34-2143
	5	34-0108			34-2108		
400	5	34-0112	34-0130	34-0147	34-2112	34-2130	34-2147
500	5	34-0116	34-0134	34-0151	34-2116	34-2134	34-2151
600	5	34-0120	34-0138	34-0155	34-2120	34-2138	34-2155

		Art.-no.
	**Snap-on mounting**	–
	**Sealed shutter**	–

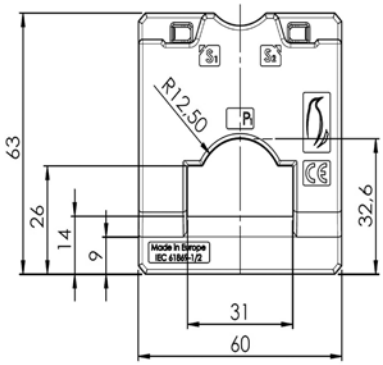



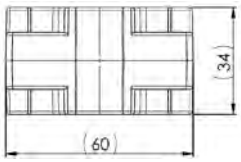

AS 176.3

Plug-in current transformer



Current transformer designed for integrated installation into fuse switch disconnectors, type SlimeLine of size XR1.

Busbar 1	17 x 6 mm
Round conductor	15,2 mm
Transformer width	45 mm
Height	65 mm
Depth	30 mm

		Secondary current [A] / Class			
Primary current [A]	Burden [VA]	5 A Cl. 1 Art.-no.	5 A Cl. 0,5 Art.-no.	1 A Cl. 1 Art.-no.	1 A Cl. 0,5 Art.-no.
75	1,5	1030006009		1030206009	
80	1,5	1030006010		1030206010	
100	1		1030005007		1030205007
	2	1030006001		1030206001	
125	1,5		1030005008		1030205008
	2,5	1030006002		1030206002	
150	1,5	1030006007	1030005001	1030206007	1030205001
	2,5	1030006003	1030005006	1030206003	1030205006
160	2,5	1030006004	1030005004	1030206004	1030205004
200	2,5	1030006005	1030005002	1030206005	1030205002
250	2,5	1030006008	1030005003	1030206008	1030205003
	3,75	1030006006	1030005005	1030206006	1030205005

		Art.-no.
	**Snap-on mounting, type E**	**55013**
	**Sealed shutter**	**–**

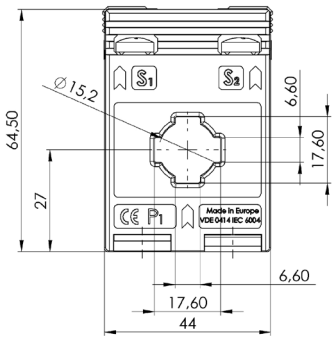

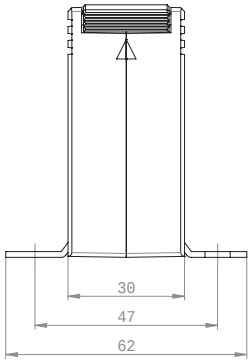

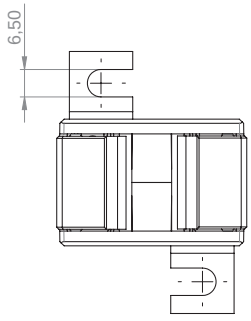

Low-voltage current transformers for industrial applications

Plug-in current transformer

ASK 176.3	Busbar 1: 17 x 6 mm Round conductor: 15,2 mm Transformer width: 45 mm	Current range: 75 ... 250 A	Page: 40
ASK 205.3	Busbar 1: 20 x 5 mm Round conductor: 17,5 mm Transformer width: 49,5 mm	Current range: 60 ... 400 A	Page: 41
ASK 21.3	Busbar 1: 20 x 10 mm Round conductor: 19,2 mm Transformer width: 61 mm	Current range: 50 ... 500 A	Page: 42
ASK 421.4	Busbar 1: 20 x 10 mm Round conductor: 20 mm Transformer width: 71 mm	Current range: 40 ... 500 A	Page: 43
ASK 231.5	Busbar 1: 30 x 10 mm Round conductor: 28 mm Transformer width: 50 mm	Current range: 60 ... 500 A	Page: 44
ASK 31.3 **ASK 31.3 2U**	Busbar 1: 30 x 10 mm Busbar 2: 2x 20 x 10 mm Round conductor: 26 mm Transformer width: 61 mm	Current range: 50 ... 750 A	Page: 45
ASK 31.4 **ASK 31.4 2U** **ASK 31.4 3U**	Busbar 1: 30 x 10 mm Busbar 2: 2x 20 x 10 mm Round conductor: 28 mm Transformer width: 61 mm	Current range: 50 ... 750 A	Page: 47
ASK 31.5 **ASK 31.5 2U**	Busbar 1: 30 x 10 mm Busbar 2: 2x 20 x 10 mm Round conductor: 28 mm Transformer width: 61 mm	Current range: 40 ... 750 A	Page: 49

ASK 31.6	Busbar 1: 30 x 10 mm Busbar 2: 20 x 13 mm Round conductor: 23 mm Transformer width: 95 mm	Current range: 40 ... 750 A	Page: 51
ASK 318.3	Busbar 1: 31 x 18 mm Round conductor: 26 mm Transformer width: 61 mm	Current range: 60 ... 600 A	Page: 52
ASK 41.4 **ASK 41.4 2U** **ASK 41.4 3U**	Busbar 1: 40 x 10 mm Busbar 2: 2x 30 x 5 mm Round conductor: 32 mm Transformer width: 71 mm	Current range: 50 ... 1000 A	Page: 53
ASK 541.4	Busbar 1: 40 x 10 mm Busbar 2: 2x 30 x 5 mm Round conductor: 32 mm Transformer width: 86 mm	Current range: 30 ... 750 A	Page: 55
ASK 41.5	Busbar 1: 40 x 10 mm Busbar 2: 2x 30 x 5 mm Round conductor: 32 mm Transformer width: 71 mm	Current range: 60 ... 1000 A	Page: 57
ASK 41.3	Busbar 1: 40 x 12 mm Busbar 2: 32 x 18 mm Round conductor: 26 mm Transformer width: 61 mm	Current range: 100 ... 750 A	Page: 58
ASK 412.4 **ASK 412.4 2U** **ASK 412.4 3U**	Busbar 1: 40 x 12 mm Busbar 2: 30 x 15 mm Round conductor: 30,5 mm Transformer width: 71 mm	Current range: 50 ... 800 A	Page: 59
ASK 41.6	Busbar 1: 40 x 12 mm Busbar 2: 30 x 15 mm Round conductor: 32 mm Transformer width: 95 mm	Current range: 50 ... 1000 A	Page: 61
ASK 51.4 **ASK 51.4 2U** **ASK 51.4 3U**	Busbar 1: 50 x 10 mm Busbar 2: 2x 40 x 10 mm Round conductor: 44 mm Transformer width: 86 mm	Current range: 100 ... 1250 A	Page: 62
ASK 51.6	Busbar 1: 50 x 12 mm Busbar 2: 2x 40 x 10 mm Round conductor: 40 mm Transformer width: 95 mm	Current range: 100 ... 1250 A	Page: 64

ASK 561.4	Busbar 1: 60 x 10 mm Busbar 2: 2x 50 x 10 mm Round conductor: 44 mm Transformer width: 86 mm	Current range: 200 ... 1250 A	Page: 65
ASK 61.4 **ASK 61.4 2U** **ASK 61.4 3U**	Busbar 1: 60 x 10 mm Busbar 2: 2x 50 x 10 mm Round conductor: 44 mm Transformer width: 96 mm	Current range: 200 ... 1200 A	Page: 66
ASK 615.3	Busbar 1: 60,6 x 15,15 mm Round conductor: 52 mm Transformer width: 90 mm	Current range: 200 ... 1600 A	Page: 69
ASK 61.6	Busbar 1: 60 x 10 mm Busbar 2: 2x 50 x 10 mm Round conductor: 40 mm Transformer width: 95 mm	Current range: 100 ... 1200 A	Page: 71
ASK 63.4	Busbar 1: 60 x 30 mm Busbar 2: 50 x 40 mm Round conductor: 44 mm Transformer width: 96 mm	Current range: 300 ... 1600 A	Page: 73
ASK 63.6	Busbar 1: 60 x 30 mm Round conductor: 30 mm Transformer width: 88 mm	Current range: 200 ... 2000 A	Page: 74
ASK 81.4 **ASK 81.4 2U** **ASK 81.4 3U**	Busbar 1: 80 x 10 mm Busbar 2: 2x 60 x 10 mm Round conductor: 55 mm Transformer width: 120 mm	Current range: 400 ... 2000 A	Page: 75
ASK 83.3	Busbar 1: 3 x 80 x 10 mm Busbar 2: 3 x 60 x 10 mm Round conductor: 70 mm Transformer width: 106 mm	Current range: 400 ... 2500 A	Page: 77
ASK 83.4	Busbar 1: 84 x 34 mm Round conductor: 34 mm Transformer width: 96 mm	Current range: 300 ... 2000 A	Page: 79
ASK 101.4 **ASK 101.4 2U**	Busbar 1: 100 x 10 mm Busbar 2: 2x 80 x 10 mm Round conductor: 70 mm Transformer width: 130 mm	Current range: 500 ... 2000 A	Page: 81

ASK 103.3	Busbar 1: 2x 100 x 10 mm Busbar 2: 3x 80 x 10 mm Round conductor: 85 mm Transformer width: 172 mm	Current range: 750 ... 3000 A	Page: 83
ASK 103.41 **ASK 103.41 2U**	Busbar 1: 103 x 41 mm Round conductor: 40 mm Transformer width: 99 mm	Current range: 400 ... 2000 A	Page: 84
ASK 105.3	Busbar 1: 100 x 56 mm Transformer width: 129 mm	Current range: 400 ... 4000 A	Page: 85
ASK 105.6	Busbar 1: 100 x 55 mm Round conductor: 55 mm Transformer width: 129 mm	Current range: 600 ... 3000 A	Page: 88
ASK 105.6N	Busbar 1: 100 x 55 mm Round conductor: 55 mm Transformer width: 129 mm	Current range: 2500 ... 4000 A	Page: 89
ASK 123.3	Busbar 1: 123 x 30 mm Busbar 2: 3x 100 x 10 mm Round conductor: 100 mm Transformer width: 172 mm	Current range: 750 ... 3000 A	Page: 90
ASK 127.3	Busbar 1: 127 x 71 mm Transformer width: 159 mm	Current range: 400 ... 4000 A	Page: 91
ASK 127.4	Busbar 1: 120 x 70 mm Round conductor: 70 mm Transformer width: 159 mm	Current range: 1000 ... 2500 A	Page: 94
ASK 127.6	Busbar 1: 120 x 70 mm Round conductor: 70 mm Transformer width: 205 mm	Current range: 1000 ... 6000 A	Page: 95
ASK 128.4	Busbar 1: 128 x 38 mm Round conductor: 38 mm Transformer width: 100 mm	Current range: 400 ... 2500 A	Page: 96
ASK 129.10	Busbar 1: 120 x 90 mm Round conductor: 90 mm Transformer width: 250 mm	Current range: 1000 ... 7500 A	Page: 97

ASK 130.3	Busbar 1: 130 x 25 mm Round conductor: 25 mm Transformer width: 180 mm	Current range: 300 ... 1600 A	Page: 98
ASK 130.5	Busbar 1: 130 x 30 mm Round conductor: 30 mm Transformer width: 180 mm	Current range: 300 ... 3200 A	Page: 99
ASK 165.5	Busbar 1: 190 x 60 mm Busbar 2: 3x 160 x 10 mm Transformer width: 266 mm	Current range: 1000 ... 4000 A	Page: 100
ASK 205.5	Busbar 1: 230 x 60 mm Busbar 2: 3x 200 x 10 mm Transformer width: 306 mm	Current range: 1200 ... 5000 A	Page: 104

ASK 176.3

Plug-in current transformer



Busbar 1	17 x 6 mm
Round conductor	15,2 mm
Transformer width	45 mm
Height	65 mm
Depth	46 mm

		Secondary current [A] / Class			
Primary current [A]	Burden [VA]	5 A Cl. 1 Art.-no.	5 A Cl. 0,5 Art.-no.	1 A Cl. 1 Art.-no.	1 A Cl. 0,5 Art.-no.
75	1,5	1020006009		1020206009	
80	1,5	1020006010		1020206010	
100	1		1020005007		1020205007
	2	1020006001		1020206001	
125	1,5		1020005008		1020205008
	2,5	1020006002		1020206002	
150	1,5	1020006007	1020005001	1020206007	1020205001
	2,5	1020006003	1020005006	1020206003	1020205006
160	2,5	1020006004	1020005004	1020206004	1020205004
200	2,5	1020006005	1020005002	1020206005	1020205002
250	2,5	1020006008	1020005003	1020206008	1020205003
	3,75	1020006006		1020206006	

		Art.-no.
	**Snap-on mounting, type E**	**55013**
	**Sealed shutter**	**–**

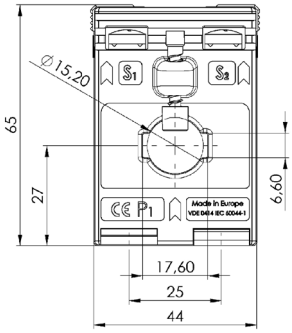

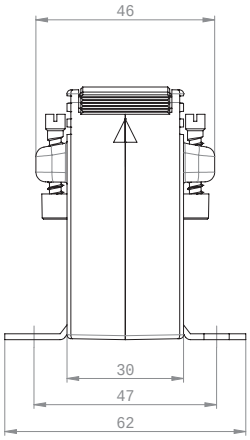

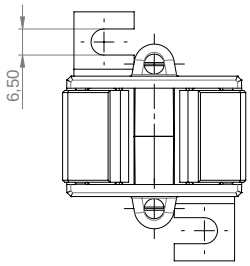

ASK 205.3

Plug-in current transformer



Busbar 1	20 x 5 mm
Round conductor	17,5 mm
Transformer width	49,5 mm
Height	65 mm
Depth	30 mm

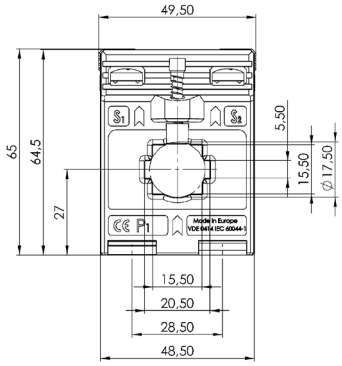

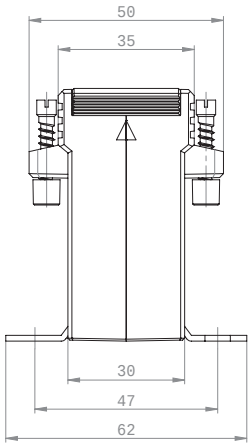

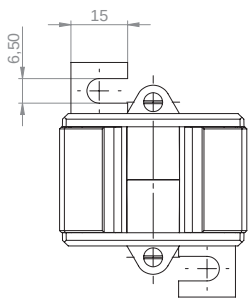

	Secondary current [A] / Class	
Primary current [A]	Burden [VA]	5 A Cl. 1 Art.-no.	1 A Cl. 1 Art.-no.
60	1	2019	2219
75	1	2020	2220
80	1,25	2021	2221
100	1,25	2022	2222
	1,5	2023	2223
150	1,5	2024	2224
	2,5	2025	2225
200	1,5	2026	2226
	2,5	2027	2227
250	2,5	2028	2228
	5	2029	2229
300	2,5	2030	2230
	5	2031	2231
400	2,5	2032	2232
	5	2033	2233

		Art.-no.
	**Snap-on mounting, type F**	**55014**
	**Sealed shutter**	**–**

ASK 21.3

Plug-in current transformer



Busbar 1	20 x 10 mm
Round conductor	19,2 mm
Transformer width	61 mm
Height	75,5 mm
Depth	48 mm

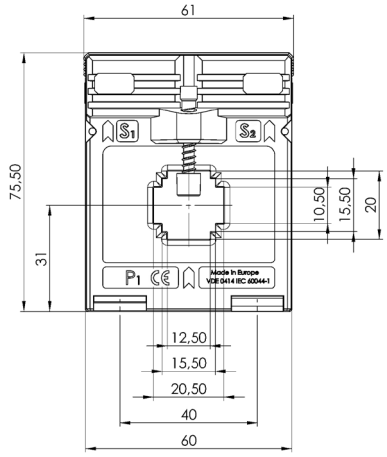

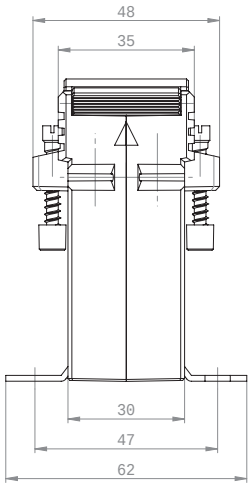

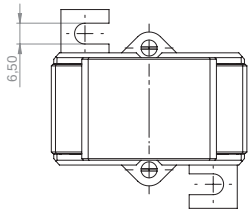

	Secondary current [A] / Class				
Primary current [A]	Burden [VA]	5 A Cl. 1 Art.-no.	5 A Cl. 0,5 Art.-no.	5 A Cl. 0,2s Art.-no.	1 A Cl. 1 Art.-no.	1 A Cl. 0,5 Art.-no.
50	1	6035			6235	
60	1	6037			6237	
	1,5	6038			6238	
75	1,5	6039			6239	
	2,5	6040			6240	
80	1,5	6041			6241	
	2,5	6042			6242	
100	1,5	6043	6011		6243	6211
	2,5	6044	6111		6244	6311
	3,75	6077			6277	
150	1,5	6046	6012	V10-1604C	6246	6212
	2,5	6047	6013	V10-1604D	6247	6213
	5	6048			6248	
200	2,5	6049	6015	V10-1704D	6249	6215
	5	6050	6016	V10-1704F	6250	6216
	7,5	6083			6283	
	10	6051			6251	
250	2,5	6052	6018	V10-1804D	6252	6218
	5	6053	6019	V10-1804F	6253	6219
	10	6054	6020		6254	6220
300	2,5	6056	6022	V10-1904D	6256	6222
	5	6057	6023	V10-1904F	6257	6223
	10	6058	6024		6258	6224
400	2,5	6060	6025	V10-2004D	6260	6225
	5	6061	6026	V10-2004F	6261	6226
	10	6062	6027		6262	6227
	15	6063			6263	
500	2,5	6064	6028	V10-2104D	6264	6228
	5	6065	6029	V10-2104F	6265	6229
	10	6066	6030		6266	6230

		Art.-no.
	**Snap-on mounting, type A**	**53011**
	**Sealed shutter, type A**	**59040**

ASK 421.4

Plug-in current transformer



Busbar 1	20 x 10 mm
Round conductor	20 mm
Transformer width	71 mm
Height	85,5 mm
Depth	58 mm

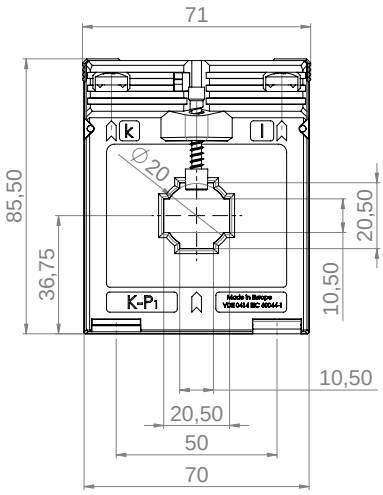

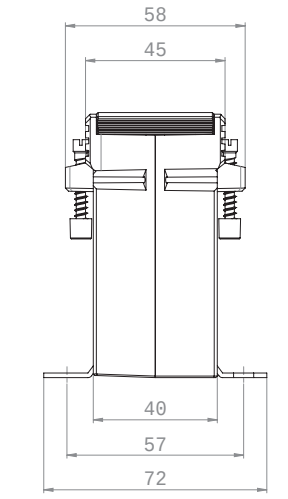

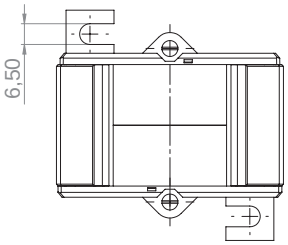

	Secondary current [A] / Class			
Primary current [A]	Burden [VA]	5 A Cl. 1 Art.-no.	5 A Cl. 0,5 Art.-no.	1 A Cl. 1 Art.-no.	1 A Cl. 0,5 Art.-no.
40	1,5	12034		12234	
50	1,5	12035	12011	12235	12211
	2,5	12036		12236	
60	1,5	12037	12012	12237	12212
	2,5	12038		12238	
75	1,5		12009		12209
	2,5	12040	12013	12240	12213
	3,75	12069		12269	
80	1,5		12010		12210
	2,5	12042	12014	12242	12214
	3,75	12068		12268	
	5			12243	
100	2,5	12044	12015	12244	12215
	5	12045		12245	
125	2,5	12047	12017	12247	12217
	5	12048	12018	12248	12218
150	2,5	12112	12019	12293	12219
	5	12050	12020	12250	12220
	10	12051		12251	
200	2,5	12276	12021	12294	12221
	5	12053	12022	12253	12222
	10	12054		12254	
	15	12055		12255	
250	5	12056	12023	12256	12223
	10	12057	12024	12257	12224
	15	12058		12258	
300	5	12059	12025	12259	12225
	10	12060	12026	12260	12226
	15	12061		12261	
400	5	12113	12027	12295	12227
	10	12062	12028	12262	12228
	15	12063	12029	12263	12229
500	5	12280	12030	12296	12230
	10	12065	12031	12265	12231
	15	12066	12032	12266	12232

		Art.-no.
	**Snap-on mounting, type D**	**55012**
	Sealed shutter, type B	**59041**

ASK 231.5

Plug-in current transformer



Busbar 1	30 x 10 mm
Round conductor	28 mm
Transformer width	50 mm
Height	70 mm
Depth	68 mm

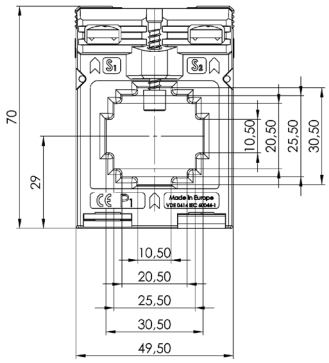

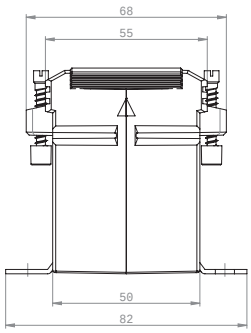

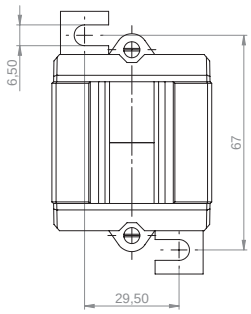

	Secondary current [A] / Class			
Primary current [A]	Burden [VA]	5 A Cl. 1 Art.-no.	5 A Cl. 0,5 Art.-no.	1 A Cl. 1 Art.-no.	1 A Cl. 0,5 Art.-no.
60	1	92052		92252	
75	1,25	92054		92254	
80	1,25	92056		92256	
100	1,5	92059		92259	
125	1,5	92062		92262	92220
	2,5	92063		92263	
150	1,5	92065		92265	92223
	2,5	92066		92266	
200	2,5	92068	92026	92268	92226
250	2,5	92071	92028	92271	92228
	5			92272	
300	2,5	92074	92030	92274	92230
	5	92075		92275	
400	2,5	92077	92032	92277	92232
	5	92078	92033	92278	92233
500	2,5	92081	92035	92281	92235
	5	92082	92036	92282	92236

		Art.-no.
	**Snap-on mounting**	–
	**Sealed shutter**	–

ASK 31.3

Plug-in current transformer



Busbar 1	30 x 10 mm
Busbar 2	2 x 20 x 10 mm
Round conductor	26 mm
Transformer width	61 mm
Height	75,5 mm
Depth	48 mm

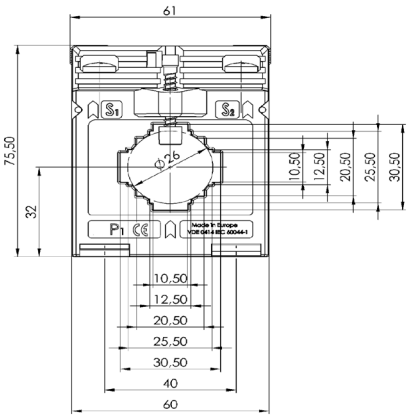

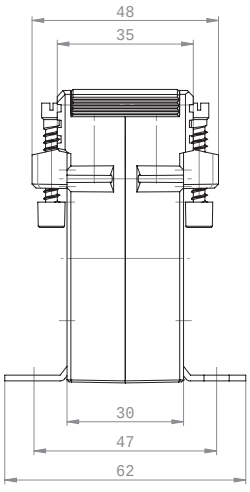

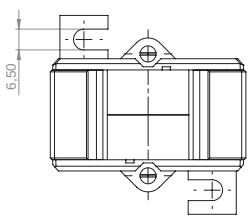

	Secondary current [A] / Class				
Primary current [A]	Burden [VA]	5 A Cl. 1 Art.-no.	5 A Cl. 0,5 Art.-no.	5 A Cl. 0,2s Art.-no.	1 A Cl. 1 Art.-no.	1 A Cl. 0,5 Art.-no.
50	1	7038			7238	
60	1	7039			7239	
75	1	7040			7240	
	1,5	7041			7241	
80	1,5	7042			7242	
	2,5	7043			7243	
100	1,5	7044	7011		7244	7211
	2,5	7045	7012		7245	7212
150	1,5	7046	7013	V11-1604C	7246	7213
	2,5	7047	7014		7247	7214
200	1,5	7048	7015	V11-1704C	7248	7215
	2,5	7049	7016	V11-1704D	7249	7216
	5	7050	7017		7250	
250	1,5	7051	7018	V11-1804C	7251	7218
	2,5	7052	7019	V11-1804D	7252	7219
	5	7053	7020	V11-1804F	7253	7220
300	1,5	7055	7021	V11-1904C	7255	7221
	2,5	7056	7022	V11-1904D	7256	7222
	5	7057	7023	V11-1904F	7257	7223
400	1,5	7059		V11-2004C	7259	
	2,5	7060	7025	V11-2004D	7260	7225
	5	7061	7026	V11-2004F	7261	7226
	10	7062			7262	
500	2,5	7063	7028	V11-2104D	7263	7228
	5	7064	7029	V11-2104F	7264	7229
	10	7065	7030		7265	7230
600	2,5	7066	7031	V11-2204D	7266	7231
	5	7067	7032	V11-2204F	7267	7232
	10	7068			7268	7233
750	2,5	7070	7035	V11-2304D	7270	7235
	5	7071	7036	V11-2304F	7271	7236
	10	7072	7037		7272	7237

		Art.-no.
	**Snap-on mounting, type A**	**53011**
	**Sealed shutter, type A**	**59040**

ASK 31.3 2U

Plug-in current transformer, secondary reconnectable



Busbar 1	30 x 10 mm
Busbar 2	2 x 20 x 10 mm
Round conductor	26 mm
Transformer width	61 mm
Height	75,5 mm
Depth	48 mm

	Secondary current [A] / Class	
Primary current [A]	Burden [VA]	5 A Cl. 1 Art.-no.	1 A Cl. 1 Art.-no.
200-100	5-2,5	7111	7311
300-150	5-2,5	7112	7312
400-200	5-2,5	7113	7313
	10-5	7114	7314
500-250	5-2,5	7115	7315
	10-5	7116	7316
600-300	10-5	7117	7317

		Art.-no.
	**Snap-on mounting, type A**	**53011**
	**Sealed shutter, type A**	**59040**

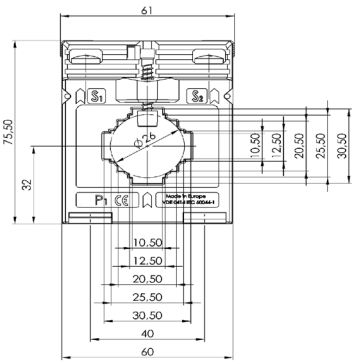

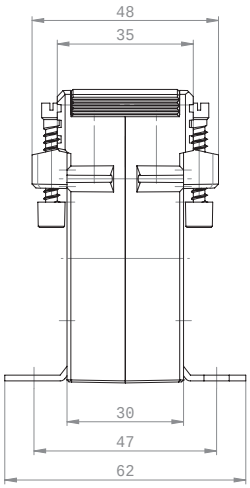

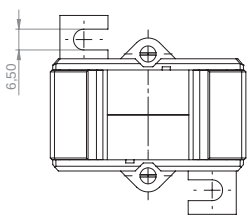

ASK 31.4

Plug-in current transformer



Busbar 1	30 x 10 mm
Busbar 2	2 x 20 x 10 mm
Round conductor	28 mm
Transformer width	61 mm
Height	75,5 mm
Depth	58 mm

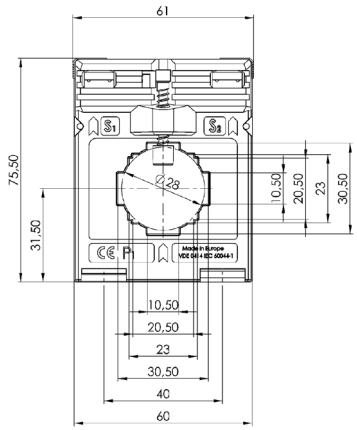

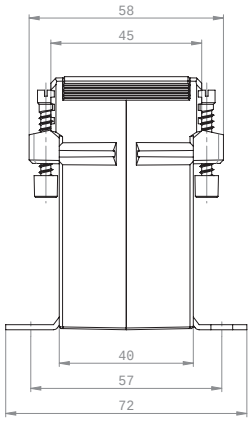

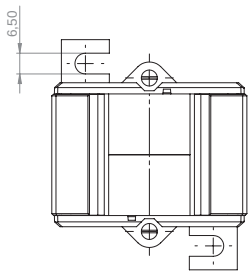

		Secondary current [A] / Class				
Primary current [A]	Burden [VA]	5 A Cl. 1 Art.-no.	5 A Cl. 0,5 Art.-no.	5 A Cl. 0,2s Art.-no.	1 A Cl. 1 Art.-no.	1 A Cl. 0,5 Art.-no.
50	1,25	8157			8357	
	1,5	8038				
60	1,25	8158			8358	
	1,5	8039			8239	
75	1,5	8041			8241	
	2,5	8042			8242	
80	1,5	8043			8243	
	2,5	8044			8244	
100	1,5	8045	8011		8245	8211
	2,5	8046	8010		8246	8210
	3,75	8152			8276	
150	1,5	8048	8012	V14-1604C	8248	8212
	2,5	8049	8013	V14-1604D	8249	8213
	5	8050	8410		8250	
200	2,5	8052	8014	V14-1704D	8252	8214
	5	8053	8015	V14-1704F	8253	8215
	7,5	8161			8281	
	10				8254	
250	2,5	8055	8016	V14-1804D	8255	8216
	5	8056	8017	V14-1804F	8256	8217
	10	8057			8257	
300	2,5	8059	8018	V14-1904D	8259	8218
	5	8060	8019	V14-1904F	8260	8219
	10	8061	8020		8261	8220
	15				8262	
400	2,5	8063	8021	V14-2004D	8263	8221
	5	8064	8022	V14-2004F	8264	8222
	10	8065	8023		8265	8223
	15				8266	
500	2,5	8067	8025	V14-2104D	8267	8225
	5	8068	8026	V14-2104F	8268	8226
	10	8069	8027		8269	8227
600	2,5	8071	8029	V14-2204D	8271	8229
	5	8072	8030	V14-2204F	8272	8230
	10	8073	8031	V14-2204H	8273	8231
	15	8074	8032		8274	8232
750	2,5	8153	8033	V14-2304D	8353	8233
	5	8154	8034	V14-2304F	8354	8234
	10	8155	8035	V14-2304H	8355	8235
	15	8156	8036		8356	8236

		Art.-no.
	**Snap-on mounting, type B**	**54011**
	**Sealed shutter, type B**	**59041**



ASK 31.4 2U

Plug-in current transformer, secondary reconnectable

		Secondary current [A] / Class	
Primary current [A]	Burden [VA]	5 A Cl. 1 Art.-no.	1 A Cl. 1 Art.-no.
200-100	5-2,5	8117	8317
300-150	5-2,5	8118	8318
	10-5	8119	8319
400-200	5-2,5	8120	8320
	10-5	8121	8321
500-250	5-2,5	8122	8322
	10-5	8123	8323
600-300	5-2,5	8124	8324
	10-5	8125	8325
	15-7,5	8126	8326

Busbar 1	30 x 10 mm
Busbar 2	2 x 20 x 10 mm
Round conductor	28 mm
Transformer width	61 mm
Height	75,5 mm
Depth	58 mm

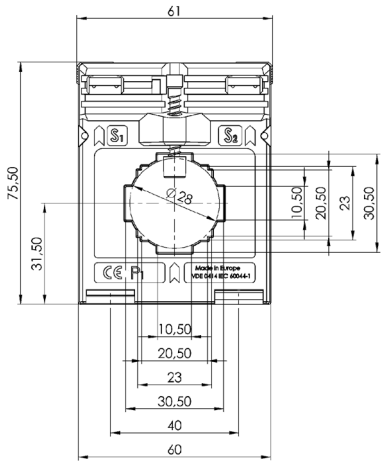

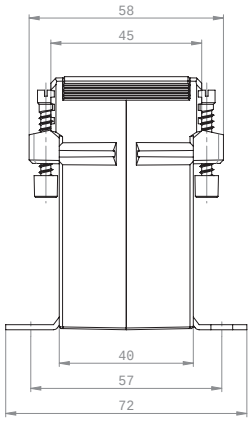

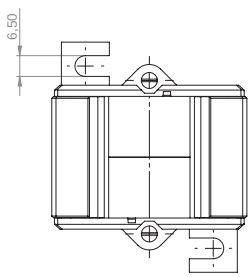

ASK 31.4 3U

Plug-in current transformer, secondary reconnectable

		Secondary current [A] / Class	
Primary current [A]	Burden [VA]	5 A Cl. 1 Art.-no.	1 A Cl. 1 Art.-no.
300-200-100	10-5-2,5	8137	8337
400-200-100	10-5-2,5	8138	8338
600-300-150	10-5-2,5	8139	8339
	15-10-5	8140	8340
600-400-200	10-5-2,5	8141	8341
	15-10-5	8142	8342

		Art.-no.
	**Snap-on mounting, type B**	**54011**
	**Sealed shutter, type B**	**59041**



ASK 31.5

Plug-in current transformer

Busbar 1	30 x 10 mm
Round conductor	28 mm
Transformer width	61 mm
Height	75,5 mm
Depth	68 mm

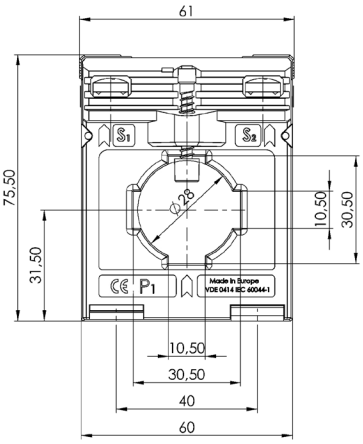

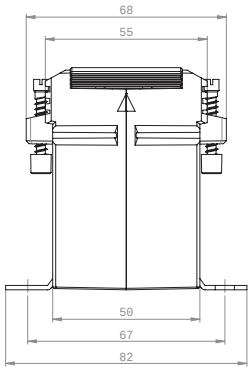

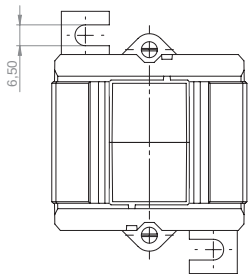

	Secondary current [A] / Class			
Primary current [A]	Burden [VA]	5 A Cl. 1 Art.-no.	5 A Cl. 0,5 Art.-no.	1 A Cl. 1 Art.-no.	1 A Cl. 0,5 Art.-no.
40	1	9043		9243	
50	1,5	9045		9245	
60	1,5	9047		9247	
	2,5	9048		9248	
75	1,5	9049	9011	9249	9211
	2,5	9050	9012	9250	9212
80	1,5	9051	9013	9251	9213
	2,5	9052	9014	9252	9214
100	1,5	9054	9015	9254	9215
	2,5	9055	9016	9255	9216
	5	9056	9017	9256	9217
150	2,5	9057	9018	9257	9218
	5	9058	9019	9258	9219
	7,5	9059		9259	
200	2,5	9060	9020	9260	9220
	5	9061	9021	9261	9221
	10	9062	9022	9262	9222
250	5	9064	9023	9264	9223
	10	9065	9024	9265	9224
	15	9066	9025	9266	9225
300	5	9067	9026	9267	9226
	10	9068	9027	9268	9227
	15	9069	9028	9269	9228
400	5	9070	9029	9270	9229
	10	9071	9030	9271	9230
	15	9072	9031	9272	9231
500	5	9074	9032	9274	9232
	10	9075	9033	9275	9233
	15	9076	9034	9276	9234
600	5	9078	9035	9278	9235
	10	9079	9036	9279	9236
	15	9080	9037	9280	9237
750	5	9082	9038	9282	9238
	10	9083	9039	9283	9239
	15	9084	9040	9284	9240

		Art.-no.
	**Snap-on mounting, type C**	**55011**
	Sealed shutter, type B	**59041**



ASK 31.5 2U

Plug-in current transformer, secondary reconnectable

Busbar 1	30 x 10 mm
Round conductor	28 mm
Transformer width	61 mm
Height	75,5 mm
Depth	68 mm

		Secondary current [A] / Class	
Primary current [A]	Burden [VA]	5 A Cl. 1 Art.-no.	1 A Cl. 1 Art.-no.
150-75	5-2,5	9132	9332
200-100	5-2,5	9133	9333
	10-5	9134	9334
300-150	5-2,5	9135	9335
	10-5	9136	9336
	15-7,5	9137	9337
400-200	5-2,5	9138	9338
	10-5	9139	9339
	15-7,5	9140	9340
500-250	5-2,5	9141	9341
	10-5	9142	9342
	15-7,5	9143	9343
600-300	5-2,5	9144	9344
	10-5	9145	9345
	15-7,5	9146	9346

		Art.-no.
	**Snap-on mounting, type C**	**55011**
	**Sealed shutter, type B**	**59041**

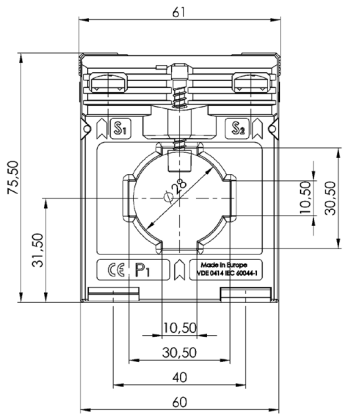

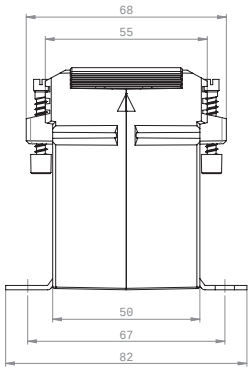

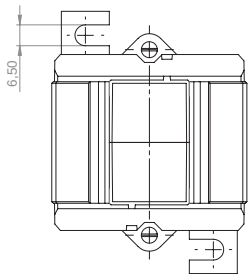

ASK 31.6

Plug-in current transformer



Busbar 1	30 x 10 mm
Busbar 2	20 x 13 mm
Round conductor	23 mm
Transformer width	95 mm
Height	116 mm
Depth	74 mm

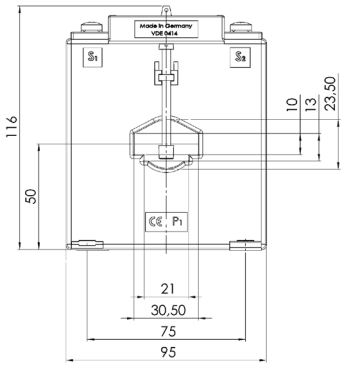

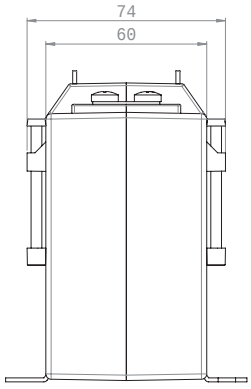

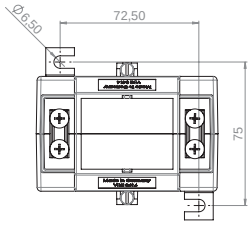

	Secondary current [A] / Class			
Primary current [A]	Burden [VA]	5 A Cl. 1 Art.-no.	5 A Cl. 0,5 Art.-no.	1 A Cl. 1 Art.-no.	1 A Cl. 0,5 Art.-no.
40	1,5	10056		10256	
50	1,5		10011		
	2,5	10058	10012		
60	1,5		10013		10213
	2,5	10059	10014	10259	10214
	3,75	10060		10260	
75	2,5	10061	10015	10261	10215
	5	10062	10016	10262	10216
80	2,5	10063	10017	10263	10217
	5	10064	10018	10264	10218
	10			10265	
100	2,5	10066	10019	10266	10219
	5	10067	10020	10267	10220
	10	10068	10021	10268	10221
150	2,5		10022		10222
	5	10070	10023	10270	10223
	10	10071	10024	10271	10224
	15	10072	10025	10272	10225
200	2,5		10026		10226
	5	10073	10027	10273	10227
	10	10074	10028	10274	10228
	15	10075	10029	10275	10229
	30	10120		10320	
250	5	10076	10030	10276	10230
	10	10077	10031	10277	10231
	15	10078	10032	10278	10232
	30	10124		10324	
300	5	10079	10034	10279	10234
	10	10080	10035	10280	10235
	15	10081	10036	10281	10236
	30	10125		10325	
400	5	10082	10038	10282	10238
	10	10083	10039	10283	10239
	15	10084	10040	10284	10240
	30	10406		10326	
500	5	10085	10042	10285	10242
	10	10086	10043	10286	10243
	15	10087	10044	10287	10244
	30	10121	10045	10321	10245
600	5	10088	10046	10288	10246
	10	10089	10047	10289	10247
	15	10090	10048	10290	10248
	30	10122	10049	10322	10249
750	5	10091	10050	10291	10250
	10	10092	10051	10292	10251
	15	10093	10052	10293	10252
	30	10123	10053	10323	10253

		Art.-no.
	**Snap-on mounting**	**–**
	**Sealed shutter, type E**	**59044**

ASK 318.3

Plug-in current transformer



Busbar 1	31 x 18 mm
Round conductor	26 mm
Transformer width	61 mm
Height	75,5 mm
Depth	48 mm

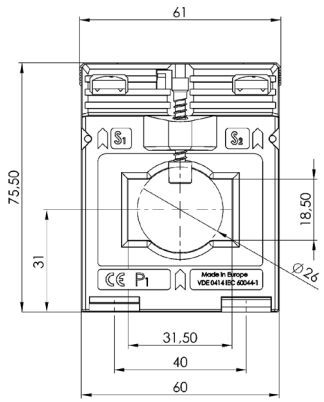

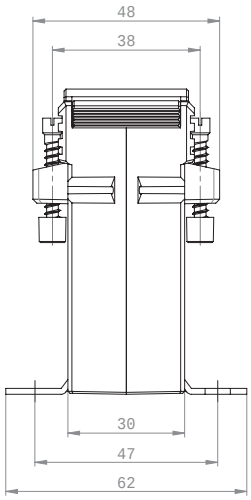

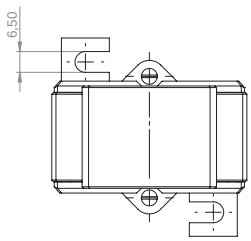

	Secondary current [A] / Class			
Primary current [A]	Burden [VA]	5 A Cl. 1 Art.-no.	5 A Cl. 0,5 Art.-no.	1 A Cl. 1 Art.-no.	1 A Cl. 0,5 Art.-no.
60	1	29042			
80	1,5	29045		29245	
100	1,5	29047	29011	29247	29211
	2,5	29048		29248	
150	1,5	29049	29013	29249	29213
	2,5	29050		29250	29214
200	2,5	29052	29016	29252	29216
	3,75	29054		29254	
	5			29253	
250	2,5	29055	29019	29255	29219
	5	29056	29020	29256	
300	2,5	29059	29023	29259	29223
	5	29060	29024	29260	29224
400	2,5	29063	29027	29263	29227
	5	29064	29028	29264	29228
	7,5	29077		29277	
	10	29065		29265	
500	2,5	29066	29030	29266	29230
	5	29067	29031	29267	29231
	10	29068		29268	
600	2,5	29069	29033	29269	29233
	5	29070	29034	29270	29234
	10	29071	29035	29271	29235

		Art.-no.
	**Snap-on mounting, type A**	**53011**
	**Sealed shutter, type A**	**59040**

ASK 41.4

Plug-in current transformer



Busbar 1	40 x 10 mm
Busbar 2	2 x 30 x 5 mm
Round conductor	32 mm
Transformer width	71 mm
Height	85,5 mm
Depth	58 mm

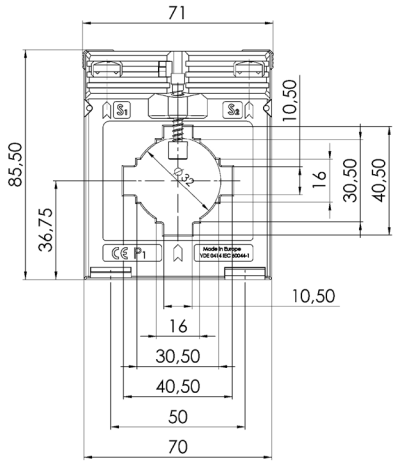

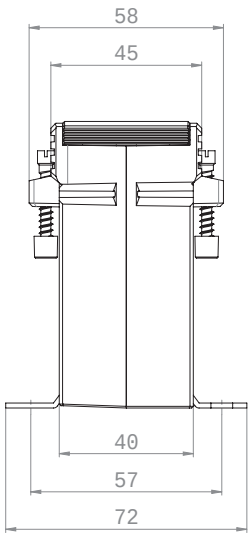

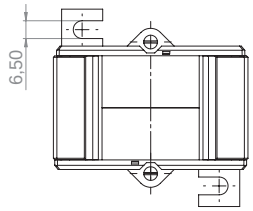

	Secondary current [A] / Class				
Primary current [A]	Burden [VA]	5 A Cl. 1 Art.-no.	5 A Cl. 0,5 Art.-no.	5 A Cl. 0,2s Art.-no.	1 A Cl. 1 Art.-no.	1 A Cl. 0,5 Art.-no.
50	1,25	13180				
	1,5	13036				
60	1,25	13181				
	1,5	13037				
75	1,5	13039			13239	
80	1,5	13041			13241	
	2,5	13042			13242	
100	1,5	13043	13011		13243	13211
	2,5	13044	13083		13244	13283
	3,75	13179			13245	
150	1,5	13046	13012	V24-1604C	13246	13212
	2,5	13047	13013		13247	13213
	5	13048			13248	
200	1,5		13014	V24-1704C		13214
	2,5	13049	13015	V24-1704D	13249	13215
	5	13050	13085		13250	13285
	10	13051			13251	
250	1,5		13016	V24-1804C		13216
	2,5	13052	13017	V24-1804D	13252	13217
	5	13053	13086	V24-1804F	13253	13286
	10	13054			13254	
300	2,5	13055	13018	V24-1904D	13255	13218
	5	13056	13019	V24-1904F	13256	13219
	10	13057	13087		13257	13287
	15	13058			13258	
400	2,5	13059	13020	V24-2004D	13259	13220
	5	13060	13021	V24-2004F	13260	13221
	10	13061	13088	V24-2004H	13261	13288
	15	13062			13262	
500	2,5	13063	13022	V24-2104D	13263	13222
	5	13064	13023	V24-2104F	13264	13223
	10	13065	13024	V24-2104H	13265	13224
	15	13066	13089		13266	13289
600	2,5	13067	13025	V24-2204D	13267	13225
	5	13068	13026	V24-2204F	13268	13226
	10	13069	13027		13269	13227
	15	13070	13090		13270	
750	2,5			V24-2304D		
	5	13071	13028	V24-2304F	13271	13228
	10	13072	13029	V24-2304H	13272	13229
	15	13073			13273	13291
800	5	13075	13030		13275	13230
	10	13076	13031		13276	13231
	15	13077			13277	
1000	5	13079	13032		13279	13232
	10	13080	13033		13280	13233

		Art.-no.
	**Snap-on mounting, type D**	**55012**
	**Sealed shutter, type B**	**59041**



Busbar 1	40 x 10 mm
Busbar 2	2 x 30 x 5 mm
Round conductor	32 mm
Transformer width	71 mm
Height	85,5 mm
Depth	58 mm

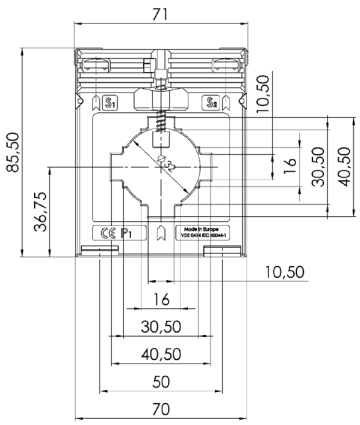

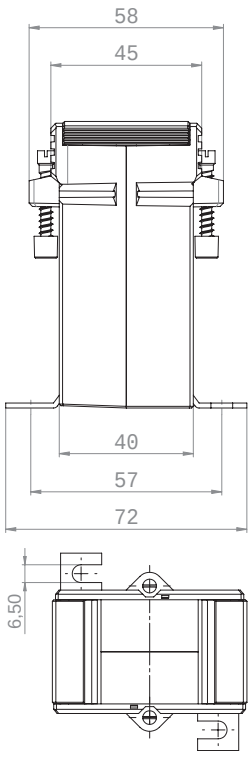

ASK 41.4 2U

Plug-in current transformer, secondary reconnectable

		Secondary current [A] / Class	
Primary current [A]	Burden [VA]	5 A Cl. 1 Art.-no.	1 A Cl. 1 Art.-no.
200-100	5-2,5	13133	13333
300-150	5-2,5	13134	13334
	10-5	13135	13335
400-200	5-2,5	13136	13336
	10-5	13137	13337
500-250	5-2,5	13138	13338
	10-5	13139	13339
600-300	5-2,5	13140	13340
	10-5	13141	13341
800-400	5-2,5	13142	13342
	10-5	13143	13343
	15-7,5	13144	13344
1000-500	5-2,5	13145	13345
	10-5	13146	13346
	15-7,5	13147	13347

ASK 41.4 3U

Plug-in current transformer, secondary reconnectable

		Secondary current [A] / Class	
Primary current [A]	Burden [VA]	5 A Cl. 1 Art.-no.	1 A Cl. 1 Art.-no.
400-200-100	10-5-2,5	13163	13363
600-300-150	10-5-2,5	13164	13364
800-400-200	10-5-2,5	13165	13365
1000-500-250	10-5-2,5	13166	13366
	15-7,5-2,5	13167	13367

		Art.-no.
	**Snap-on mounting, type D**	**55012**
	**Sealed shutter, type B**	**59041**

ASK 541.4

Plug-in current transformer



Busbar 1	40 x 10 mm
Busbar 2	2 x 30 x 5 mm
Round conductor	32 mm
Transformer width	86 mm
Height	98,5 mm
Depth	58 mm

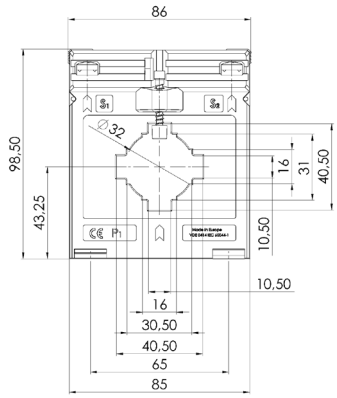

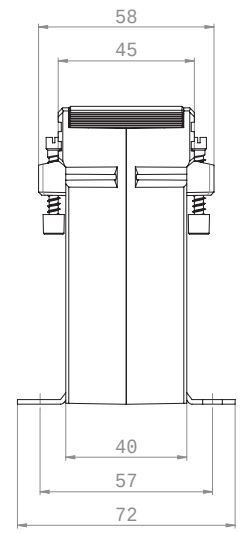

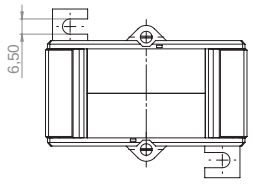

		Secondary current [A] / Class				
Primary current [A]	Burden [VA]	5 A Cl. 1 Art.-no.	5 A Cl. 0,5 Art.-no.	5 A Cl. 0,2s Art.-no.	1 A Cl. 1 Art.-no.	1 A Cl. 0,5 Art.-no.
30	1	15340			15248	
	1,5	15048				
40	1,5	15049			15249	
50	1,5	15051			15251	
60	1,5	15053	15013		15253	15213
	2,5	15054			15254	
75	1,5	15055	15014		15255	15214
	2,5	15056	15100		15256	15300
80	2,5	15057	15016		15257	15216
100	2,5	15114	15017		15314	15217
	5	15059			15259	
125	2,5		15019			15219
	5	15061			15261	
150	2,5	15063	15021		15263	15221
	5	15064			15264	
	10	15065			15265	
200	2,5		15023	V33-1704D		15223
	5	15066	15024	V33-1704F	15266	15224
	10	15067	15101		15267	15301
	15	15068	15102		15268	15302
250	2,5		15025	V33-1804D		15225
	5	15069	15026	V33-1804F	15269	15226
	10	15070	15103	V33-1804H	15270	15303
	15	15071	15104		15271	15304
300	2,5		15027	V33-1904D		15227
	5	15072	15028	V33-1904F	15272	15228
	10	15073	15029	V33-1904H	15273	15229
	15	15074	15105		15274	15305
400	2,5		15030	V33-2004D		15230
	5	15075	15031	V33-2004F	15275	15231
	10	15076	15032	V33-2004H	15276	15232
	15	15077	15139		15277	15339
500	2,5			V33-2104D		
	5	15098	15033	V33-2104F	15313	15233
	10	15078	15034	V33-2104H	15278	15234
	15	15079	15035	V33-2104J	15279	15235
	30	15080			15280	
600	2,5			V33-2204D		
	5	15095	15036	V33-2204F	15293	15236
	10	15081	15037	V33-2204H	15281	15237
	15	15082	15038	V33-2204J	15282	15238
	30	15083	15039		15283	15239
750	2,5			V33-2304D		
	5			V33-2304F		
	10	15084	15040	V33-2304H	15284	15240
	15	15085	15041	V33-2304J	15285	15241
	30	15086	15042		15286	15242

		Secondary current [A] / Class				
Primary current [A]	Burden [VA]	5 A Cl. 1 Art.-no.	5 A Cl. 0,5 Art.-no.	5 A Cl. 0,2s Art.-no.	1 A Cl. 1 Art.-no.	1 A Cl. 0,5 Art.-no.
800	10	15087	15043		15287	15243
	15	15088	15044		15288	15244
	30	15089	15106		15289	15306
1000	2,5			V33-2504D		
	5		15045	V33-2504F		15245
	10	15090	15046	V33-2504H	15290	15246
	15	15091	15047	V33-2504J	15291	15247
	30	15092	15012		15292	

		Art.-no.
	**Snap-on mounting**	**–**
	**Sealed shutter, type C**	**59042**



ASK 41.5

Plug-in current transformer

Busbar 1	40 x 10 mm
Busbar 2	2 x 30 x 5 mm
Round conductor	32 mm
Transformer width	71 mm
Height	85,5 mm
Depth	68 mm

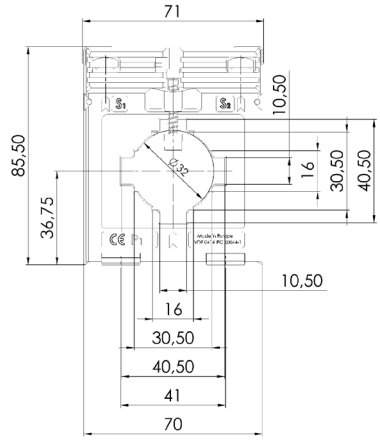

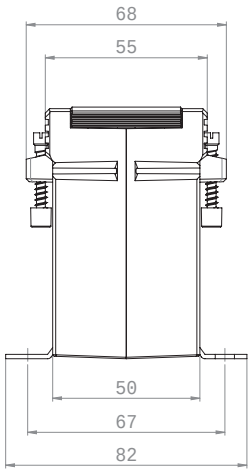

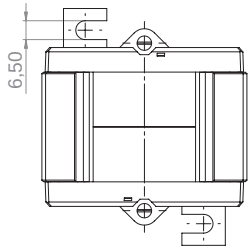

	Secondary current [A] / Class			
Primary current [A]	Burden [VA]	5 A Cl. 1 Art.-no.	5 A Cl. 0,5 Art.-no.	1 A Cl. 1 Art.-no.	1 A Cl. 0,5 Art.-no.
60	1,5	1010006002		1010206002	
75	1,5	1010006004	1010005001	1010206004	1010205001
	2,5	1010006005	1010005002	1010206005	1010205002
80	1,5	1010006006	1010005003	1010206006	1010205003
	2,5	1010006007	1010005004	1010206007	1010205004
100	1,5	1010006008	1010005005	1010206008	1010205005
	2,5	1010006009	1010005006	1010206009	1010205006
	3,75	1010006046		1010206010	
150	2,5	1010006010	1010005007	1010206011	1010205007
	5	1010006011		1010206012	
	7,5	1010006012		1010206013	
200	2,5	1010006013	1010005010	1010206014	1010205010
	5	1010006014	1010005011	1010206015	1010205011
	10	1010006048		1010206016	
250	2,5	1010006015	1010005012	1010206017	1010205013
	5	1010006016	1010005013	1010206018	1010205014
	10	1010006017	1010005014	1010206019	1010205015
	15	1010006047		1010206020	
300	2,5	1010006018	1010005015	1010206021	1010205017
	5	1010006019	1010005016	1010206022	1010205018
	10	1010006020	1010005017	1010206023	1010205019
	15	1010006021		1010206024	
400	2,5	1010006022	1010005019	1010206025	1010205021
	5	1010006023	1010005020	1010206026	1010205022
	10	1010006024	1010005021	1010206027	1010205023
	15	1010006025	1010005022	1010206028	1010205024
500	2,5	1010006026	1010005023	1010206029	1010205025
	5	1010006027	1010005024	1010206030	1010205026
	10	1010006028	1010005025	1010206031	1010205027
	15	1010006029	1010005026	1010206032	1010205028
600	2,5	1010006030	1010005027	1010206033	1010205029
	5	1010006031	1010005028	1010206034	1010205030
	10	1010006032	1010005029	1010206035	1010205031
	15	1010006033	1010005030	1010206036	1010205032
750	2,5	1010006034	1010005031	1010206037	1010205033
	5	1010006035	1010005032	1010206038	1010205034
	10	1010006036	1010005033	1010206039	1010205035
	15	1010006037	1010005034	1010206040	1010205036
800	2,5	1010006038	1010005035	1010206041	1010205037
	5	1010006039	1010005036	1010206042	1010205038
	10	1010006040	1010005037	1010206043	1010205039
	15	1010006041		1010206044	
1000	2,5	1010006042	1010005039	1010206045	1010205041
	5	1010006043	1010005040	1010206046	1010205042
	10	1010006044	1010005041	1010206047	1010205043
	15	1010006045		1010206048	

		Art.-no.
	**Snap-on mounting, type C**	**55011**
	**Sealed shutter, type B**	**59041**

ASK 41.3

Plug-in current transformer



Busbar 1	40 x 12 mm
Busbar 2	32 x 18 mm
Round conductor	26 mm
Transformer width	61 mm
Height	75,5 mm
Depth	48 mm

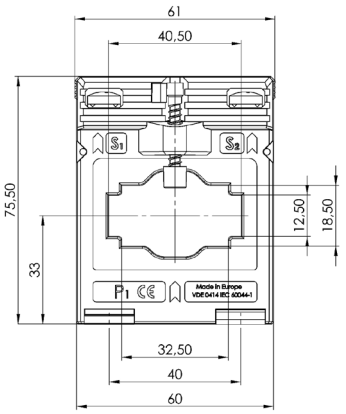

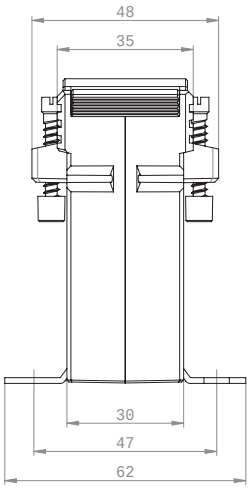

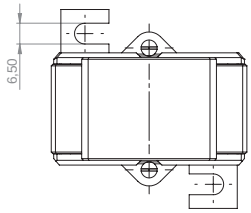

Primary current [A]	Burden [VA]	Secondary current [A] / Class: 5 A Cl. 1 Art.-no.	Secondary current [A] / Class: 1 A Cl. 1 Art.-no.
100	1	11037	11237
	1,5	11038	11238
150	1,5	11039	11239
	2,5	11040	11240
200	1,5	11041	11241
	2,5	11042	11242
250	1,5	11043	11243
	2,5	11044	11244
300	1,5	11046	11246
	2,5	11047	11247
	5	11048	11248
400	1,5	11049	
	2,5	11050	
	5	11051	
500	1,5	11052	
	2,5	11053	
	5	11054	
600	1,5	11056	
	2,5	11057	
	5	11058	
750	2,5	11060	
	5	11061	
	10	11062	

		Art.-no.
	**Snap-on mounting, type A**	**53011**
	**Sealed shutter, type A**	**59040**



ASK 412.4

Plug-in current transformer

Busbar 1	40 x 12 mm
Busbar 2	30 x 15 mm
Round conductor	30,5 mm
Transformer width	71 mm
Height	85,5 mm
Depth	58 mm

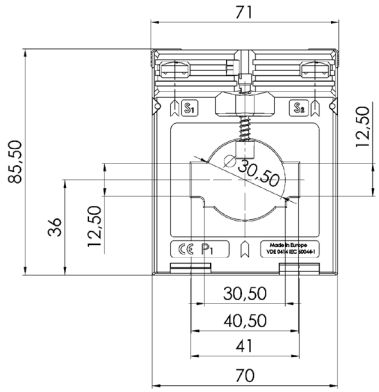

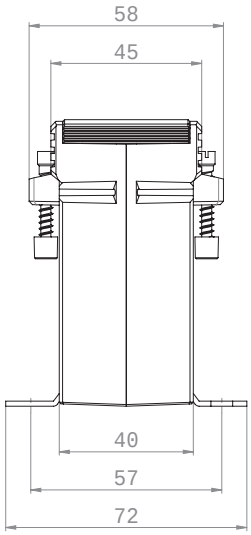

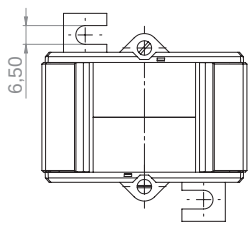

	Secondary current [A] / Class			
Primary current [A]	Burden [VA]	5 A Cl. 1 Art.-no.	5 A Cl. 0,5 Art.-no.	1 A Cl. 1 Art.-no.	1 A Cl. 0,5 Art.-no.
50	1,25	28036		28236	
	1,5	28037		28237	
60	1,25	28038		28238	
	1,5	28039		28239	
75	1,5	28040		28240	
	2,5	28041		28241	
80	1,5	28042		28242	
	2,5	28043		28243	
100	1,5	28044	28011	28244	28211
	2,5	28045		28245	
	3,75	28046		28246	
150	1,5	28047	28012	28247	28212
	2,5	28048	28013	28248	28213
	5	28049		28249	
200	2,5	28051	28015	28251	28215
	5	28052	28098	28252	28298
	7,5	28086		28286	
	10	28053			
250	1,5	28054	28016	28254	28216
	2,5	28055	28017	28255	28217
	5	28056	28014	28256	28214
	10	28057		28257	
300	2,5	28058	28018	28258	28218
	5	28059	28019	28259	28219
	10	28060		28260	
	15	28061		28261	
400	2,5	28062	28020	28262	28220
	5	28063	28021	28263	28221
	10	28064	28009	28264	28209
	15	28065		28265	
500	2,5	28066	28022	28266	28222
	5	28067	28023	28267	28223
	10	28068	28024	28268	28224
	15	28069		28269	
600	2,5	28070	28025	28270	28225
	5	28071	28026	28271	28226
	10	28072	28027	28272	28227
	15	28073		28273	
750	5	28074	28028	28274	28228
	10	28075	28029	28275	28229
	15	28076	28010	28276	28210
800	5	28078	28030	28278	28230
	10	28079	28031	28279	28231
	15	28080	28035	28280	28235

		Art.-no.
	**Snap-on mounting, type D**	**55012**
	**Sealed shutter, type B**	**59041**



Busbar 1	40 x 12 mm
Busbar 2	30 x 15 mm
Round conductor	30,5 mm
Transformer width	71 mm
Height	85,5 mm
Depth	58 mm

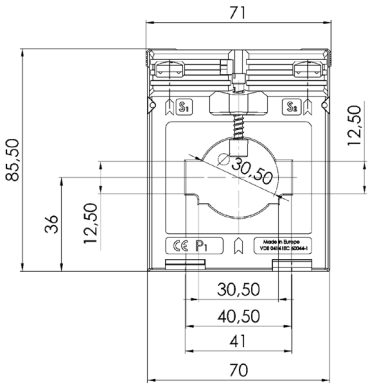

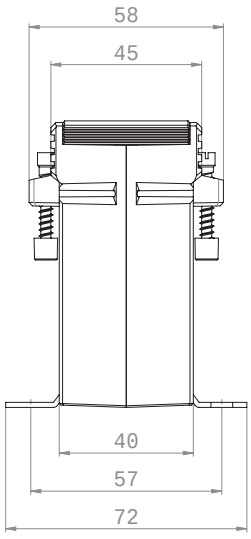

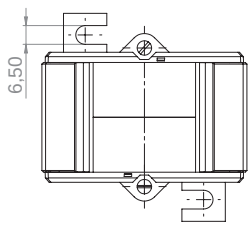

ASK 412.4 2U

Plug-in current transformer, secondary reconnectable

		Secondary current [A] / Class	
Primary current [A]	Burden [VA]	5 A Cl. 1 Art.-no.	1 A Cl. 1 Art.-no.
200-100	5-2,5	28133	28333
300-150	5-2,5	28134	28334
	10-5	28135	28335
400-200	5-2,5	28136	28336
	10-5	28137	28337
500-250	5-2,5	28138	28338
	10-5	28139	28339
600-300	5-2,5	28140	28340
	10-5	28141	28341
800-400	5-2,5	28143	28343
	10-5	28144	28344
	15-7,5	28145	28345

ASK 412.4 3U

Plug-in current transformer, secondary reconnectable

		Secondary current [A] / Class	
Primary current [A]	Burden [VA]	5 A Cl. 1 Art.-no.	1 A Cl. 1 Art.-no.
400-200-100	10-5-2,5	28163	28363
600-300-150	10-5-2,5	28164	28364
800-400-200	10-5-2,5	28165	28365

		Art.-no.
	**Snap-on mounting, type D**	**55012**
	**Sealed shutter, type B**	**59041**

ASK 41.6

Plug-in current transformer



Busbar 1	40 x 12 mm
Busbar 2	30 x 15 mm
Round conductor	32 mm
Transformer width	95 mm
Height	116 mm
Depth	74 mm

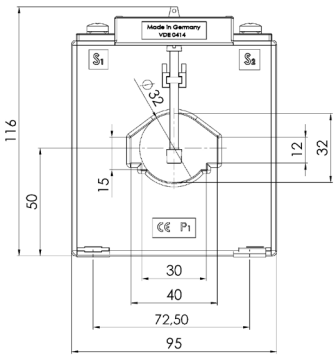

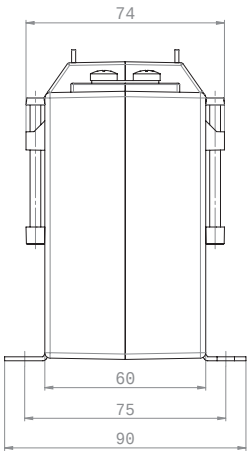

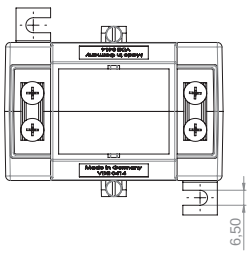

		Secondary current [A] / Class			
Primary current [A]	Burden [VA]	5 A Cl. 1 Art.-no.	5 A Cl. 0,5 Art.-no.	1 A Cl. 1 Art.-no.	1 A Cl. 0,5 Art.-no.
50	1,5	14060	14011	14260	14211
60	1,5	14062	14012	14262	14212
	2,5	14063		14263	
75	1,5	14064		14264	
	2,5	14065	14013	14265	14213
	3,75	14134		14334	
80	2,5	14067	14015	14267	14215
	3,75	14135		14335	
100	2,5	14069	14017	14269	14217
	5	14070	14018	14270	14218
	7,5	14136		14336	
150	5	14072	14021	14272	14221
	10	14073		14273	
	15	14074		14274	
200	5	14075	14025	14275	14225
	10	14076	14026	14276	14226
	15	14077		14277	
250	5	14078	14029	14278	14229
	10	14079	14030	14279	14230
	15	14080	14031	14280	14231
300	5	14081	14033	14281	14233
	10	14082	14034	14282	14234
	15	14083	14035	14283	14235
400	5	14084	14037	14284	14237
	10	14085	14038	14285	14238
	15	14086	14039	14286	14239
500	5	14087	14041	14287	14241
	10	14088	14042	14288	14242
	15	14089	14043	14289	14243
	30	14137		14337	
600	10	14090	14045	14290	14245
	15	14091	14046	14291	14246
	30	14092	14047	14292	14247
750	10	14094	14049	14294	14249
	15	14095	14050	14295	14250
	30	14096	14051	14296	14251
800	10	14098	14053	14298	14253
	15	14099	14054	14299	14254
	30	14100	14055	14300	14255
1000	10	14102	14057	14302	14257
	15	14103	14058	14303	14258
	30	14104	14059	14304	14259

		Art.-no.
	**Snap-on mounting**	**–**
	**Sealed shutter, type E**	**59044**

ASK 51.4

Plug-in current transformer



Busbar 1	50 x 12 mm
Busbar 2	2 x 40 x 10 mm
Round conductor	44 mm
Transformer width	86 mm
Height	98,5 mm
Depth	58 mm

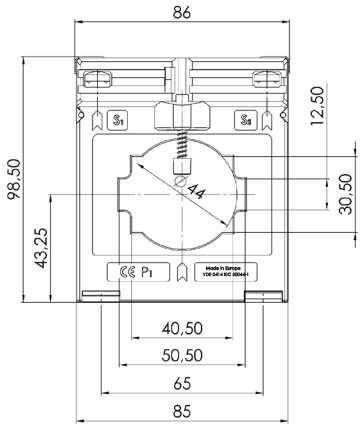

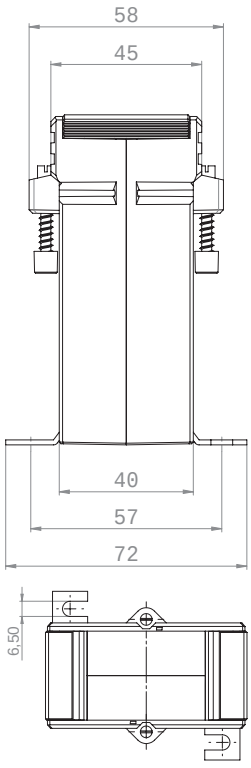

	Secondary current [A] / Class				
Primary current [A]	Burden [VA]	5 A Cl. 1 Art.-no.	5 A Cl. 0,5 Art.-no.	5 A Cl. 0,2s Art.-no.	1 A Cl. 1 Art.-no.	1 A Cl. 0,5 Art.-no.
100	1,5	16043			16243	
150	1,5	16044	16011		16244	16211
	2,5	16045	16010		16245	16210
200	1,5		16012	V34-1704C		16212
	2,5	16046	16013	V34-1704D	16246	16213
	5	16047	16152	V34-1704F	16247	16352
250	1,5		16014			16214
	2,5	16048	16015	V34-1804D	16248	16215
	5	16049	16153	V34-1804F	16249	16353
	10	16177			16390	
300	2,5	16050	16017	V34-1904D	16250	16217
	5	16051	16018	V34-1904F	16251	16218
	10	16052			16252	
400	2,5	16053	16019	V34-2004D	16253	16219
	5	16054	16020	V34-2004F	16254	16220
	10	16055	16021	V34-2004H	16255	16221
	15				16256	
500	2,5	16057	16022	V34-2104D	16257	16222
	5	16058	16023	V34-2104F	16258	16223
	10	16059	16024	V34-2104H	16259	16224
	15	16060	16202		16260	
600	2,5	16061	16025	V34-2204D	16261	16225
	5	16062	16026	V34-2204F	16262	16226
	10	16063	16027	V34-2204H	16263	16227
	15	16064	16154		16264	16354
750	2,5	16065	16028	V34-2304D	16265	16228
	5	16066	16029	V34-2304F	16266	16229
	10	16067	16030	V34-2304H	16267	16230
	15	16068	16203		16268	16355
800	5	16069	16031	V34-2404F	16269	16231
	10	16070	16032	V34-2404H	16270	16232
	15	16071	16033		16271	16233
1000	2,5			V34-2504D		
	5	16073	16034	V34-2504F	16273	16234
	10	16074	16035	V34-2504H	16274	16235
	15	16075	16036	V34-2504J	16275	16236
1200	5	16077	16037		16277	16237
	10	16078	16038		16278	16238
	15	16079	16039		16279	16239
	30	16080			16280	
1250	5	16081	16040		16281	16240
	10	16082	16041		16282	16241
	15	16083	16042		16283	16242
	30	16084			16284	

		Art.-no.
	**Snap-on mounting**	–
	**Sealed shutter, type C**	**59042**

ASK 51.4 2U

Plug-in current transformer, secondary reconnectable



Busbar 1	50 x 12 mm
Busbar 2	2 x 40 x 10 mm
Round conductor	44 mm
Transformer width	86 mm
Height	98,5 mm
Depth	58 mm

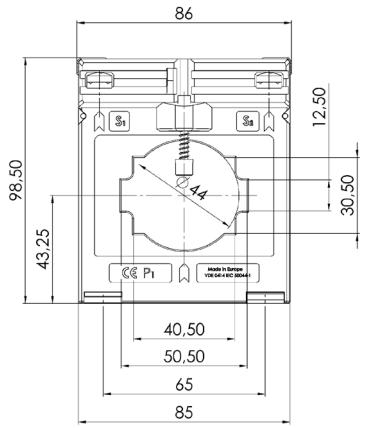

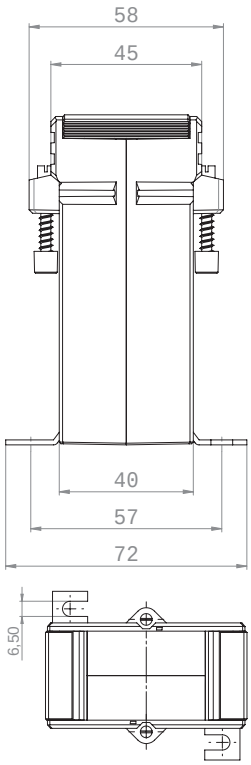

	Secondary current [A] / Class	
Primary current [A]	Burden [VA]	5 A Cl. 1 Art.-no.	1 A Cl. 1 Art.-no.
400-200	5-2,5	16130	16330
	10-5	16131	16331
500-250	5-2,5	16132	16332
	10-5	16133	16333
600-300	5-2,5	16134	16334
	10-5	16135	16335
800-400	5-2,5	16136	16336
	10-5	16137	16337
	15-7,5	16138	16338
1000-500	5-2,5	16139	16339
	10-5	16140	16340
	15-7,5	16141	16341
1200-600	5-2,5	16142	16342
	10-5	16143	16343
	15-7,5	16144	16344
	30-15	16145	16345

ASK 51.4 3U

Plug-in current transformer, secondary reconnectable

	Secondary current [A] / Class		
Primary current [A]	Burden [VA]	5 A Cl. 1 Art.-no.	1 A Cl. 1 Art.-no.
600-400-200	15-7,5-5	16178	16378
800-400-200	10-5-2,5	16162	16362
1000-500-250	10-5-2,5	16163	16363
	15-7,5-2,5	16164	16364
1000-600-300	10-5-2,5	16180	16380
	15-10-5	16176	16376
1000-600-400	10-5-2,5	16175	16375
1000-800-600	15-10-5	16179	16379
1200-600-300	10-5-2,5	16165	16365
	15-7,5-2,5	16166	16366
1200-1000-300	7,5-5-2,5	16174	16374

		Art.-no.
	**Snap-on mounting**	**–**
	**Sealed shutter, type C**	**59042**

ASK 51.6

Plug-in current transformer



Busbar 1	50 x 12 mm
Busbar 2	40 x 30 mm
Round conductor	40 mm
Transformer width	95 mm
Height	116 mm
Depth	74 mm

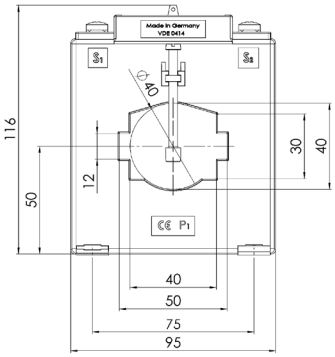

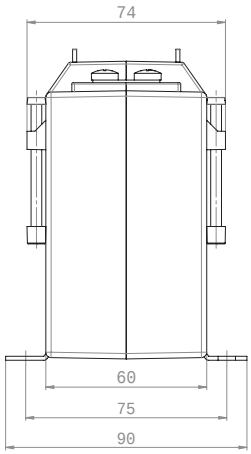

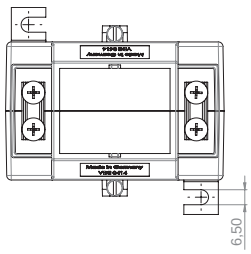

		Secondary current [A] / Class			
Primary current [A]	Burden [VA]	5 A Cl. 1 Art.-no.	5 A Cl. 0,5 Art.-no.	1 A Cl. 1 Art.-no.	1 A Cl. 0,5 Art.-no.
100	2,5	17058		17258	
	5	17059		17259	
150	2,5	17060	17013	17260	17213
	5	17061	17014	17261	17214
	10	17062		17262	
200	2,5	17063	17016	17263	17216
	5	17064	17017	17264	17217
	10	17065	17018	17265	17218
250	2,5	17066	17019	17266	17219
	5	17067	17020	17267	17220
	10	17068	17021	17268	17221
	15	17069	17022	17269	17222
300	5	17070	17024	17270	17224
	10	17071	17025	17271	17225
	15	17072	17026	17272	17226
	30	17073		17273	
400	5	17074	17028	17274	17228
	10	17075	17029	17275	17229
	15	17076	17030	17276	17230
	30	17077		17277	
500	5	17078	17032	17278	17232
	10	17079	17033	17279	17233
	15	17080	17034	17280	17234
	30	17081		17281	
600	5	17082	17036	17282	17236
	10	17083	17037	17283	17237
	15	17084	17038	17284	17238
	30	17085		17285	
750	5	17086	17040	17286	17240
	10	17087	17041	17287	17241
	15	17088	17042	17288	17242
	30	17089		17289	
800	10	17090	17044	17290	17244
	15	17091	17045	17291	17245
	30	17092		17292	
	45	17093		17293	
1000	10	17094	17047	17294	17247
	15	17095	17048	17295	17248
	30	17096	17049	17296	17249
	45	17097		17297	
1200	10	17098	17051	17298	17251
	15	17099	17052	17299	17252
	30	17100	17053	17300	17253
	45	17101		17301	
1250	10	17102	17055	17302	17255
	15	17103	17056	17303	17256
	30	17104	17057	17304	17257
	45	17105		17305	

		Art.-no.
	**Snap-on mounting**	**–**
	**Sealed shutter, type E**	**59044**



ASK 561.4

Plug-in current transformer

Busbar 1	60 x 10 mm
Busbar 2	30 x 40 mm
Busbar 3	2 x 50 x 10 mm
Round conductor	44 mm
Transformer width	86 mm
Height	98,5 mm
Depth	58 mm

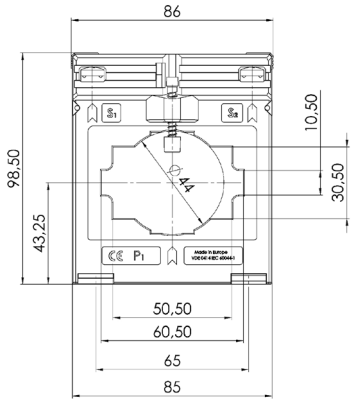

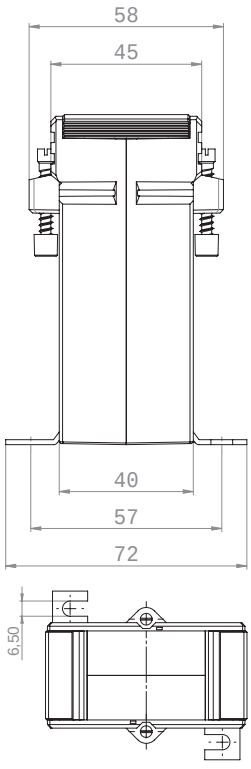

		Secondary current [A] / Class			
Primary current [A]	Burden [VA]	5 A Cl. 1 Art.-no.	5 A Cl. 0,5 Art.-no.	1 A Cl. 1 Art.-no.	1 A Cl. 0,5 Art.-no.
200	2,5	18036		18236	
250	2,5	18037		18237	
	5	18038		18238	
300	2,5	18039	18012	18239	18212
	5	18040		18240	
400	2,5	18042	18014	18242	18214
	5	18043	18015	18243	18215
	10	18044		18244	
500	2,5		18016		18216
	5	18045	18017	18245	18217
	10	18046		18246	
	15	18047		18247	
600	2,5		18018		18218
	5	18048	18019	18248	18219
	10	18049	18020	18249	18220
	15	18050		18250	
750	2,5		18021		18221
	5	18051	18022	18251	18222
	10	18052	18023	18252	18223
	15	18053		18253	
800	5	18097	18024	18297	18224
	10	18054	18025	18254	18225
	15	18055	18026	18255	18226
1000	5	18104	18027	18304	18227
	10	18057	18028	18257	18228
	15	18058	18029	18258	18229
	30	18059		18259	
1200	5	18100	18030	18267	18230
	10	18060	18031	18260	18231
	15	18061	18032	18261	18232
	30	18062		18262	
1250	5	18102	18033	18302	18233
	10	18063	18034	18263	18234
	15	18064	18035	18264	18235

		Art.-no.
	**Snap-on mounting**	**–**
	**Sealed shutter, type C**	**59042**

ASK 61.4

Plug-in current transformer



Busbar 1	63 x 10 mm
Busbar 2	2 x 50 x 10 mm
Round conductor	44 mm
Transformer width	96 mm
Height	105,5 mm
Depth	58 mm

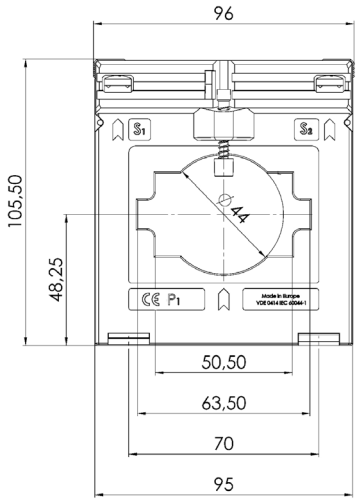

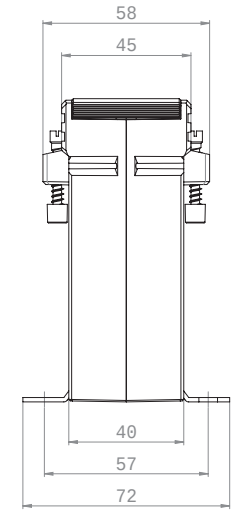

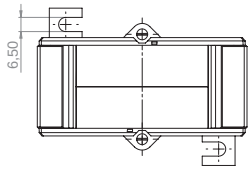

		Secondary current [A] / Class				
Primary current [A]	Burden [VA]	5 A Cl. 1 Art.-no.	5 A Cl. 0,5 Art.-no.	5 A Cl. 0,2s Art.-no.	1 A Cl. 1 Art.-no.	1 A Cl. 0,5 Art.-no.
200	1,5	19047	19009		19247	19209
	2,5	19048	19010		19248	19210
250	1,5	19049	19011	V41-1804C	19249	19211
	2,5	19050	19012	V41-1804D	19250	19212
	5	19111			19175	
300	1,5	19051	19013		19251	19213
	2,5	19052	19014	V41-1904D	19252	19214
	5	19053	19015	V41-1904F	19253	19215
400	1,5	19054	19016		19254	19216
	2,5	19055	19017	V41-2004D	19255	19217
	5	19056	19018	V41-2004F	19256	19218
	10	19057	19094	V41-2004H	19257	19294
500	1,5		19019			19219
	2,5	19058	19020	V41-2104D	19258	19220
	5	19059	19021	V41-2104F	19259	19221
	10	19060	19095	V41-2104H	19260	19295
	15	19061			19261	
600	2,5	19062	19022	V41-2204D	19262	19222
	5	19063	19023	V41-2204F	19263	19223
	10	19064	19024	V41-2204H	19264	19224
	15	19065	19097	V41-2204J	19265	19297
750	2,5	19066	19025	V41-2304D	19266	19225
	5	19067	19026	V41-2304F	19267	19226
	10	19068	19027	V41-2304H	19268	19227
	15	19069	19098	V41-2304J	19269	19298
800	2,5	19070	19028		19270	19228
	5	19071	19029		19271	19229
	10	19072	19030		19272	19230
	15	19073	19031		19273	19231
1000	2,5			V41-2504D		
	5	19074	19032	V41-2504F	19274	19232
	10	19075	19033	V41-2504H	19275	19233
	15	19076	19034	V41-2504J	19276	19234
1200	2,5			V41-2604D		
	5	19078	19035	V41-2604F	19278	19235
	10	19079	19036	V41-2604H	19279	19236
	15	19080	19037	V41-2604J	19280	19237
	30	19081	19100		19281	19300

		Secondary current [A] / Class				
Primary current [A]	Burden [VA]	5 A Cl. 1 Art.-no.	5 A Cl. 0,5 Art.-no.	5 A Cl. 0,2s Art.-no.	1 A Cl. 1 Art.-no.	1 A Cl. 0,5 Art.-no.
1250	5	19082	19038	V41-2704F	19282	19238
	10	19083	19039	V41-2704H	19283	19239
	15	19084	19040	V41-2704J	19284	19240
	30	19085	19101		19285	19301
1500	5	19086	19041	V41-2804F	19286	19241
	10	19087	19042	V41-2804H	19287	19242
	15	19088	19043	V41-2804J	19288	19243
	30	19089	19102		19289	19302
1600	5	19090	19044		19290	19244
	10	19091	19045		19291	19245
	15	19092	19046		19292	19246
	30	19093	19103		19293	19303

		Art.-no.
	**Snap-on mounting**	**–**
	**Sealed shutter, type C**	**59042**

• Please note: Current transformers in cl. 0.2S are only deliverable for busbar 60x10 mm



Busbar 1	63 x 10 mm
Busbar 2	2 x 50 x 10 mm
Round conductor	44 mm
Transformer width	96 mm
Height	105,5 mm
Depth	58 mm

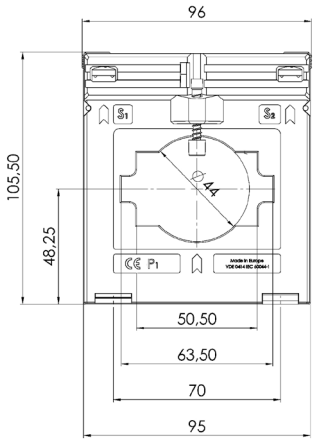

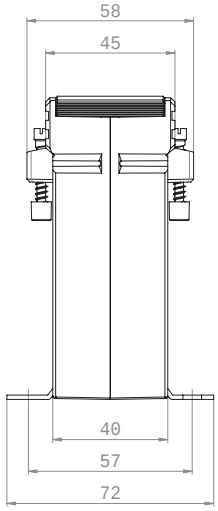

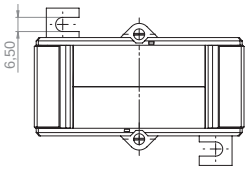

ASK 61.4 2U

Plug-in current transformer, secondary reconnectable

		Secondary current [A] / Class	
Primary current [A]	Burden [VA]	5 A Cl. 1 Art.-no.	1 A Cl. 1 Art.-no.
500-250	5-2,5	19141	19341
600-300	5-2,5	19142	19342
	10-5	19143	19343
800-400	5-2,5	19144	19344
	10-5	19145	19345
	15-7,5	19146	19346
1000-500	5-2,5	19147	19347
	10-5	19148	19348
	15-7,5	19149	19349
1200-600	5-2,5	19150	19350
	10-5	19151	19351
	15-7,5	19152	19352

ASK 61.4 3U

Plug-in current transformer, secondary reconnectable

		Secondary current [A] / Class	
Primary current [A]	Burden [VA]	5 A Cl. 1 Art.-no.	1 A Cl. 1 Art.-no.
800-400-200	10-5-2,5	19182	19382
1000-500-250	10-5-2,5	19183	19383
	15-7,5-2,5	19184	19384
1000-600-300	10-5-2,5	19185	19385
	15-7,5-2,5	19186	19386
1000-600-400	10-5-2,5	19199	19399
1200-600-300	10-5-2,5	19187	19387
	15-7,5-2,5	19188	19388

		Art.-no.
	**Snap-on mounting**	**–**
	**Sealed shutter, type C**	**59042**

ASK 615.3

Plug-in current transformer



Busbar: 60,6 x 15,15 mm
Round conductor: 52 mm
Transformer width: 90 mm
Height: 114,40 mm
Depth: 30 mm

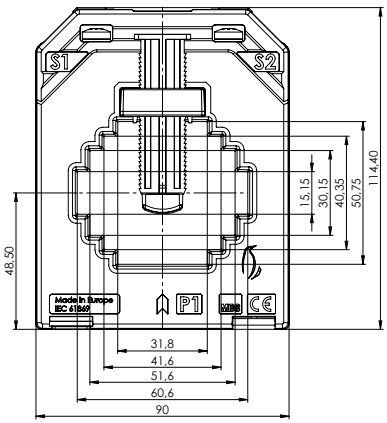

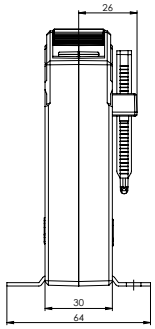

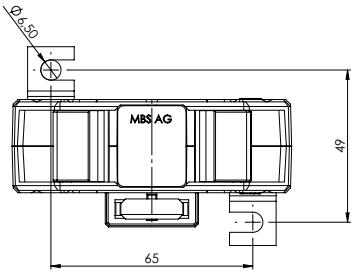

		Secondary current [A] / Class				
Primary current [A]	Burden [VA]	5A Cl. 1 Art.-no.	5A Cl. 0,5 Art.-no.	5A Cl. 0,5s Art.-no.	5A Cl. 0,2 Art.-no.	5A Cl. 0,2s Art.-no.
200	2.5	6153-10000				
250	1		6153-10500			
	2.5	6153-10001				
300	1		6153-10501			
	2.5	6153-10003	6153-10502			
400	1			6153-10600		
	2.5	6153-10006	6153-10503	6153-10601		
	3.75	6153-10007	6153-10504			
	5	6153-10008				
500	2.5	6153-10009	6153-10505	6153-10602		
	5	6153-10010	6153-10506	6153-10603		
600	2.5	6153-10012	6153-10508	6153-10604	6153-10900	
	5	6153-10013	6153-10509	6153-10605		
	7.5	6153-10014	6153-10510			
750	2.5	6153-10015	6153-10511	6153-10607	6153-10901	
	5	6153-10016	6153-10512	6153-10608		
	7.5	6153-10017	6153-10513	6153-10609		
800	2.5	6153-10018	6153-10514	6153-10610	6153-10902	
	5	6153-10019	6153-10515	6153-10611		
	7.5	6153-10020	6153-10516	6153-10612		
1000	2.5	6153-10022	6153-10518		6153-10903	6153-10400
	5	6153-10023	6153-10519	6153-10613	6153-10904	6153-10401
	10	6153-10024	6153-10520	6153-10614	6153-10905	
1250	2.5					6153-10402
	5	6153-10025	6153-10522	6153-10616	6153-10906	6153-10403
	10	6153-10026	6153-10523	6153-10617	6153-10907	
	15	6153-10027	6153-10524	6153-10618	6153-10908	

Included: Slider for fixing to the Busbar.

ASK 615.3



Busbar: 60,6 x 15,15 mm
Round conductor: 52 mm
Transformer width: 90 mm
Height: 114,40 mm
Depth: 30 mm

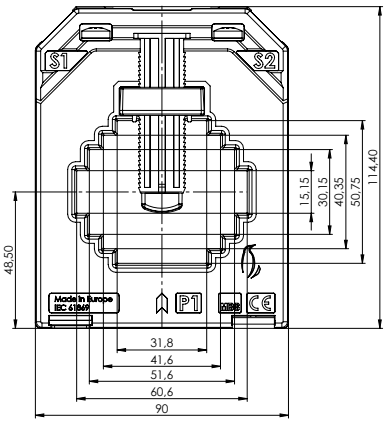

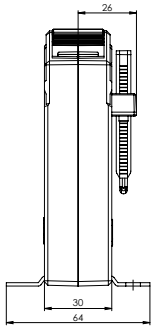

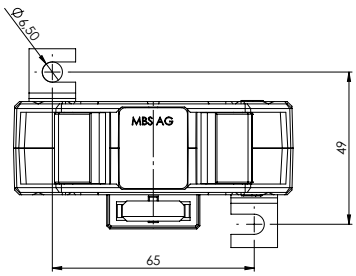

		Secondary current [A] / Class				
Primary current [A]	Burden [VA]	5A Cl. 1 Art.-no.	5A Cl. 0,5 Art.-no.	5A Cl. 0,5s Art.-no.	5A Cl. 0,2 Art.-no.	5A Cl. 0,2s Art.-no.
1500	5	6153-10029	6153-10526	6153-10619	6153-10909	6153-10404
	10	6153-10030	6153-10527	6153-10620	6153-10910	6153-10405
	15	6153-10031	6153-10528	6153-10621		
1600	5	6153-10033	6153-10530	6153-10623	6153-10912	6153-10406
	10	6153-10034	6153-10531	6153-10624	6153-10913	6153-10407
	15	6153-10035	6153-10532	6153-10625	6153-10914	6153-10408

		Secondary current [A] / Class				
Primary current [A]	Burden [VA]	1A Cl. 1 Art.-no.	1A Cl. 0,5 Art.-no.	1A Cl. 0,5s Art.-no.	1A Cl. 0,2 Art.-no.	1A Cl. 0,2s Art.-no.
200	2.5	6153-10200				
250	1					
	2.5	6153-10201	6153-10700			
300	1		6153-10701			
	2.5	6153-10202	6153-10702			
	3.75	6153-10203				
400	1		6153-10703			
	1.25	6153-10220	6153-10719	6153-10800		
	1.5	6153-10221	6153-10720	6153-10813		
	2.5	6153-10204	6153-10704			
	5	6153-10205				
500	2.5	6153-10206	6153-10705	6153-10801		
	3.75		6153-10706			
	5	6153-10207				
600	2.5	6153-10208	6153-10707	6153-10802		
	5	6153-10209	6153-10708	6153-10803		
750	2.5	6153-10210	6153-10709	6153-10804	6153-10300	
	5	6153-10211	6153-10710	6153-10805		
	7.5	6153-10212				
800	2.5	6153-10213	6153-10712	6153-10806	6153-10301	
	3.75	6153-10222	6153-10721	6153-10814	6153-10306	
	5	6153-10214	6153-10713	6153-10807		
1000	2.5	6153-10215	6153-10714	6153-10808	6153-10302	6153-10101
	3.75	6153-10223	6153-10722	6153-10815	6153-10307	
	5	6153-10216	6153-10715	6153-10809	6153-10303	
1250	2.5	6153-10217	6153-10716	6153-10810	6153-10304	6153-10100
	3.75	6153-10224	6153-10723	6153-10816	6153-10308	
	5	6153-10218	6153-10717	6153-10811	6153-10305	
	7.5	6153-10219	6153-10718	6153-10812		

Included: Slider for fixing to the Busbar.

ASK 61.6

Plug-in current transformer



Busbar 1	60 x 10 mm
Busbar 2	50 x 30 mm
Round conductor	40 mm
Transformer width	95 mm
Height	116 mm
Depth	74 mm

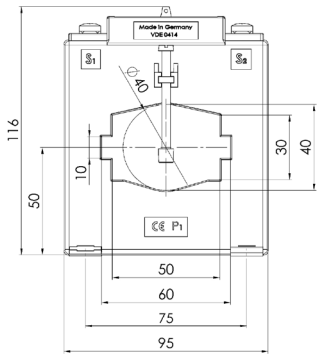

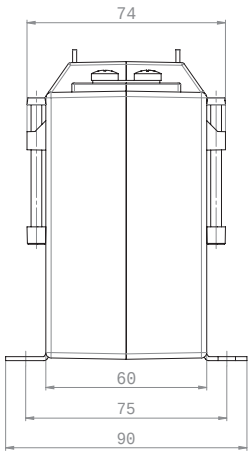

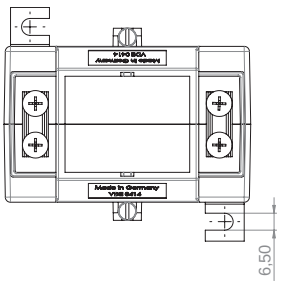

		Secondary current [A] / Class			
Primary current [A]	Burden [VA]	5 A Cl. 1 Art.-no.	5 A Cl. 0,5 Art.-no.	1 A Cl. 1 Art.-no.	1 A Cl. 0,5 Art.-no.
100	1,5	20063	20011	20263	20211
150	1,5	20065	20012	20265	20212
	2,5	20066	20013	20266	20213
200	2,5	20067	20014	20267	20214
	5	20068	20015	20268	20215
	10	20069		20269	
250	2,5	20116	20016	20321	20216
	5	20070	20017	20270	20217
	10	20071		20271	
	15	20072		20272	
300	2,5	20117	20019	20322	20219
	5	20073	20020	20273	20220
	10	20074	20021	20274	20221
	15	20075		20275	
400	2,5	20118	20023	20323	20223
	5	20076	20024	20276	20224
	10	20077	20025	20277	20225
	15	20078	20026	20278	20226
	30	20079		20279	
500	2,5	20119	20027	20324	20227
	5	20080	20028	20280	20228
	10	20081	20029	20281	20229
	15	20082	20030	20282	20230
	30	20083		20283	
600	2,5	20120	20031	20325	20231
	5	20084	20032	20284	20232
	10	20085	20033	20285	20233
	15	20086	20034	20286	20234
	30	20087		20287	
750	2,5	20121	20035	20326	20235
	5	20088	20036	20288	20236
	10	20089	20037	20289	20237
	15	20090	20038	20290	20238
	30	20091		20291	
800	5	20092	20040	20292	20240
	10	20093	20041	20293	20241
	15	20094	20042	20294	20242
	30	20095		20295	
1000	5	20122	20043	20327	20243
	10	20096	20044	20296	20244
	15	20097	20045	20297	20245
	30	20098	20046	20298	20246
	45	20099		20299	
1200	5	20123	20047	20328	20247
	10	20100	20048	20300	20248
	15	20101	20049	20301	20249
	30	20102	20050	20302	20250
	45	20103		20303	

		Secondary current [A] / Class			
Primary current [A]	Burden [VA]	5 A Cl. 1 Art.-no.	5 A Cl. 0,5 Art.-no.	1 A Cl. 1 Art.-no.	1 A Cl. 0,5 Art.-no.
1250	5	20124	20051	20329	20251
	10	20104	20052	20304	20252
	15	20105	20053	20305	20253
	30	20106	20054	20306	20254
	45	20107		20307	
1500	5	20125	20055	20330	20255
	10	20108	20056	20308	20256
	15	20109	20057	20309	20257
	30	20110	20058	20310	20258
	45	20111		20311	

		Art.-no.
	**Snap-on mounting**	**–**
	**Sealed shutter, type E**	**59044**



ASK 63.4

Plug-in current transformer

Busbar 1	60 x 30 mm
Busbar 2	50 x 40 mm
Round conductor	44 mm
Transformer width	96 mm
Height	105,5 mm
Depth	58 mm

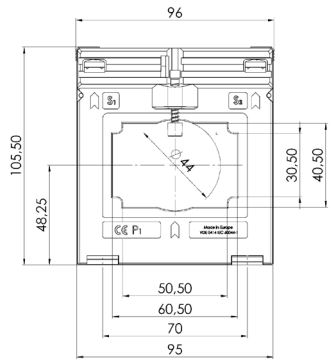

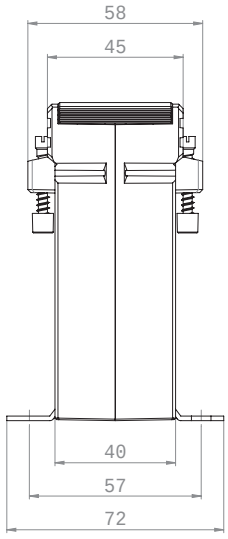

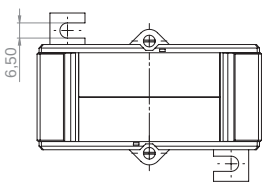

	Secondary current [A] / Class			
Primary current [A]	Burden [VA]	5 A Cl. 1 Art.-no.	5 A Cl. 0,5 Art.-no.	1 A Cl. 1 Art.-no.	1 A Cl. 0,5 Art.-no.
300	1,5	25041	25011	25241	25211
	2,5	25042	25012	25242	25212
400	2,5	25043	25013	25243	25213
	5	25044	25014	25244	25214
500	5	25045	25015	25245	25215
	10	25046		25246	
600	5	25047	25017	25247	25217
	10	25048	25018	25248	25218
	15	25049		25249	
750	5	25050	25020	25250	25220
	10	25051	25021	25251	25221
	15	25052	25022	25252	25222
800	5	25053	25023	25253	25223
	10	25054	25024	25254	25224
	15	25055	25025	25255	25225
1000	5	25056	25026	25256	25226
	10	25057	25027	25257	25227
	15	25058	25028	25258	25228
1200	5	25059	25029	25259	25229
	10	25060	25030	25260	25230
	15	25061	25031	25261	25231
1250	5	25062	25032	25262	25232
	10	25063	25033	25263	25233
	15	25064	25034	25264	25234
1500	5	25065	25035	25265	25235
	10	25066	25036	25266	25236
	15	25067	25037	25267	25237
1600	5	25068VG	25038VG	25268VG	25238VG
	10	25069VG	25039VG	25269VG	25239VG
	15	25070VG	25040VG	25270VG	25240VG

		Art.-no.
	**Snap-on mounting**	**–**
	**Sealed shutter, type C**	**59042**



ASK 63.6

Plug-in current transformer

Busbar 1	60 x 30 mm
Round conductor	30 mm
Transformer width	88 mm
Height	129 mm
Depth	78 mm

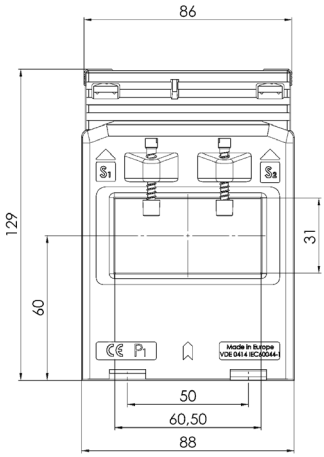

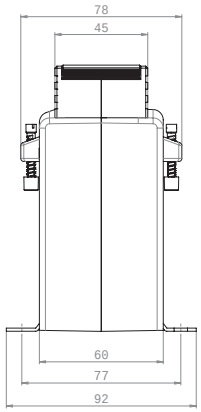

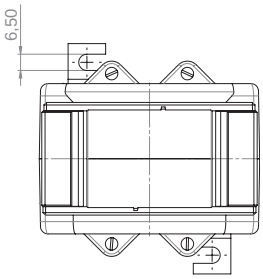

	Secondary current [A] / Class			
Primary current [A]	Burden [VA]	5 A Cl. 1 Art.-no.	5 A Cl. 0,5 Art.-no.	1 A Cl. 1 Art.-no.	1 A Cl. 0,5 Art.-no.
200	1,5	85060		85260	
	2,5	85061		85261	
250	1,5	85062	85011	85262	85211
	2,5	85063	85012	85263	85212
	5	85116		85316	
300	1,5	85064	85013	85264	85213
	2,5	85065	85014	85265	85214
	5	85066	85015	85266	85215
	10	85067		85267	
400	2,5	85068	85017	85268	85217
	5	85069	85018	85269	85218
	10	85071			
500	2,5	85073	85021	85273	85221
	5	85074	85022	85274	85222
	10	85075		85275	
	15	85076		85276	
600	2,5	85077	85025	85277	85225
	5	85078	85026	85278	85226
	10	85079	85027	85279	85227
	15	85080		85280	
750	2,5	85081	85029	85281	85229
	5	85082	85030	85282	85230
	10	85083	85031	85283	85231
	15	85084		85284	
800	2,5	85085	85033	85285	85233
	5	85086	85034	85286	85234
	10	85087	85035	85287	85235
	15	85088	85036	85288	85236
1000	5	85089	85037	85289	85237
	10	85090	85038	85290	85238
	15	85091	85039	85291	85239
	30	85092		85292	
1200	5	85093	85041	85293	85241
	10	85094	85042	85294	85242
	15	85095	85043	85295	85243
	30	85096		85296	
1250	5	85097	85045	85297	85245
	10	85098	85046	85298	85246
	15	85099	85047	85299	85247
	30	85100		85300	
1500	5	85101	85049	85301	85249
	10	85102	85050	85302	85250
	15	85103	85051	85303	85251
	30	85104		85304	
1600	5	85105	85053	85305	85253
	10	85106	85054	85306	85254
	15	85107	85055	85307	85255
	30	85108		85308	
2000	5	85109VV	85056VV	85309VV	85256VV
	10	85110VV	85057VV	85310VV	85257VV
	15	85111VV	85058VV	85311VV	85258VV

		Art.-no.
	**Snap-on mounting**	**–**
	**Sealed shutter, type C**	**59042**

ASK 81.4

Plug-in current transformer



Busbar 1	80 x 10 mm
Busbar 2	60 x 30 mm
Busbar 3	2 x 60 x 10 mm
Round conductor	55 mm
Transformer width	120 mm
Height	123,5 mm
Depth	58 mm

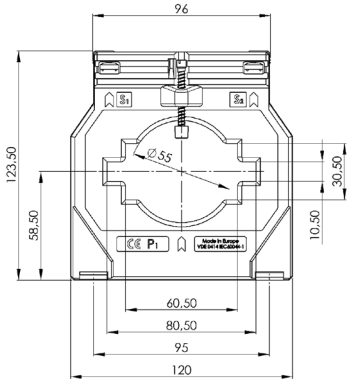

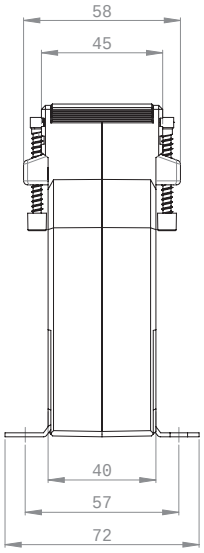

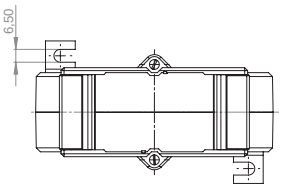

	Secondary current [A] / Class				
Primary current [A]	Burden [VA]	5 A Cl. 1 Art.-no.	5 A Cl. 0,5 Art.-no.	5 A Cl. 0,2s Art.-no.	1 A Cl. 1 Art.-no.	1 A Cl. 0,5 Art.-no.
400	2,5	21038	21009	V47-2004D	21238	21209
	5	21039	21010	V47-2004F	21239	21210
	10	21198			21292	
500	2,5	21040	21011	V47-2104D	21240	21211
	5	21041	21135	V47-2104F	21241	21335
	10	21042	21078		21242	21278
600	2,5	21043	21012	V47-2204D	21243	21212
	5	21044	21013	V47-2204F	21244	21213
	10	21045	21014	V47-2204H	21245	21214
750	2,5	21046	21015	V47-2304D	21246	21215
	5	21047	21016	V47-2304F	21247	21216
	10	21048	21017	V47-2304H	21248	21217
	15	21049	21079		21249	21279
800	2,5	21050	21018		21250	21218
	5	21051	21019		21251	21219
	10	21052	21020		21252	21220
	15	21053	21080		21253	21280
1000	2,5	21084				
	5	21054	21021	V47-2504F	21254	21221
	10	21055	21022	V47-2504H	21255	21222
	15	21056	21023	V47-2504J	21256	21223
	30	21057			21257	
1200	5	21058	21024	V47-2604F	21258	21224
	10	21059	21025	V47-2604H	21259	21225
	15	21060	21026	V47-2604J	21260	21226
1250	5	21062	21027	V47-2704F	21262	21227
	10	21063	21028	V47-2704H	21263	21228
	15	21064	21029	V47-2704J	21264	21229
1500	5	21085	21030	V47-2804F	21285	21230
	10	21066	21031	V47-2804H	21266	21231
	15	21067	21032	V47-2804J	21267	21232
	30	21068			21268	
1600	5	21086	21033		21286	21233
	10	21070	21034		21270	21234
	15	21071	21035		21271	21235
	30	21072			21272	
2000	10	21074	21036		21274	21236
	15	21075	21037		21275	21237
	30	21076			21276	

		Art.-no.
	**Snap-on mounting**	**–**
	**Sealed shutter, type C**	**59042**



Busbar 1	80 x 10 mm
Busbar 2	60 x 30 mm
Busbar 3	2 x 60 x 10 mm
Round conductor	55 mm
Transformer width	120 mm
Height	123,5 mm
Depth	58 mm

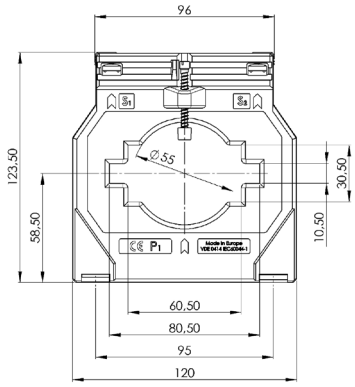

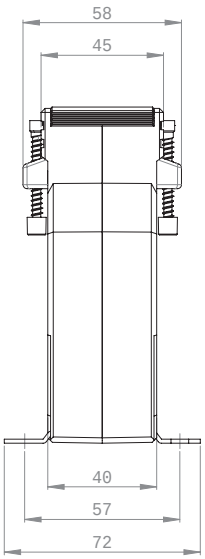

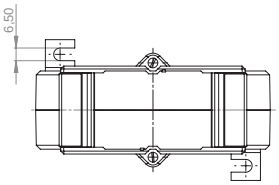

ASK 81.4 2U

Plug-in current transformer, secondary reconnectable

		Secondary current [A] / Class	
Primary current [A]	Burden [VA]	5 A Cl. 1 Art.-no.	1 A Cl. 1 Art.-no.
1000-500	10-5	21120	21320
	15-7,5	21121	21321
1200-600	10-5	21122	21322
	15-7,5	21123	21323
1500-750	10-5	21124	21324
	15-7,5	21125	21325
	30-15	21126	21326
1600-800	10-5	21127	21327
	15-7,5	21128	21328

ASK 81.4 3U

Plug-in current transformer, secondary reconnectable

		Secondary current [A] / Class	
Primary current [A]	Burden [VA]	5 A Cl. 1 Art.-no.	1 A Cl. 1 Art.-no.
1000-750-500	10-5-2,5	21166	21366
1200-800-600	15-10-5	21164	21364
1500-1000-500	15-10-5	21163	21363
1500-1000-750	15-10-5	21165	21365
1600-800-400	15-10-5	21162	21362

		Art.-no.
	**Snap-on mounting**	**–**
	**Sealed shutter, type C**	**59042**



ASK 83.3

Plug-in current transformer

Busbar 1:	3 x 80 x 10 mm
Busbar 2:	3 x 60 x 10 mm
Busbar 3:	3 x 50 x 10 mm
Round conductor:	70 mm
Transformer width:	106 mm
Height:	132,60 mm
Depth:	30 mm

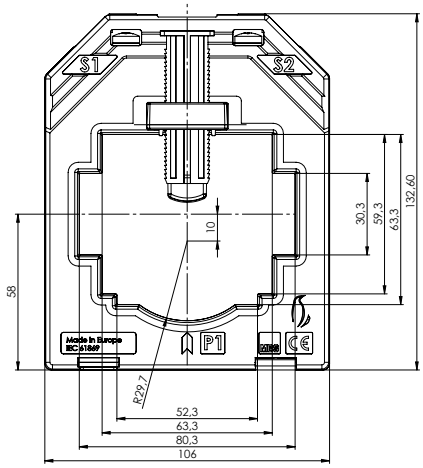

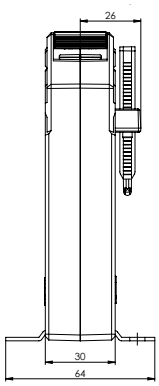

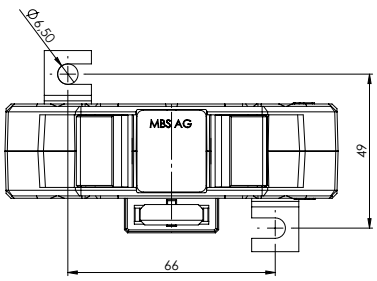

		Secondary current [A] / Class				
Primary current [A]	Burden [VA]	5A Cl. 1 Art.-no.	5A Cl. 0,5 Art.-no.	5A Cl. 0,5s Art.-no.	5A Cl. 0,2 Art.-no.	5A Cl. 0,2s Art.-no.
400	2.5	833-10000	833-10500			
	5	833-10001				
500	2.5	833-10002	833-10502	833-10600		
	5	833-10003	833-10503			
600	2.5	833-10004	833-10504	833-10601		
	5	833-10005	833-10505	833-10602		
	7.5	833-10006	833-10506			
750	2.5	833-10007	833-10507	833-10603		
	5	833-10008	833-10508	833-10604		
	7.5	833-10009	833-10509			
800	2.5	833-10010	833-10510	833-10605	833-10900	
	5	833-10011	833-10511	833-10606		
	7.5			833-10607		
	10	833-10012	833-10512			
1000	2.5	833-10013	833-10513	833-10608	833-10901	
	5	833-10014	833-10514	833-10609	833-10902	
	10	833-10015	833-10515	833-10610		
1250	2.5	833-10016	833-10516	833-10611	833-10903	
	5	833-10017	833-10517	833-10612	833-10904	
	10	833-10018	833-10518	833-10613		
1500	2.5	833-10019	833-10519	833-10614	833-10905	833-10400
	5	833-10020	833-10520	833-10615	833-10906	833-10401
	10	833-10021	833-10521	833-10616	833-10907	
1600	2.5	833-10022	833-10522	833-10617	833-10908	833-10402
	5	833-10023	833-10523	833-10618	833-10909	833-10403
	10	833-10024	833-10524	833-10619	833-10910	
2000	2.5	833-10025	833-10525	833-10620	833-10911	833-10404
	5	833-10026	833-10526	833-10621	833-10912	833-10405
	10	833-10027	833-10527	833-10622	833-10913	
2500	2.5	833-10028	833-10528	833-10623	833-10914	833-10406
	5	833-10029	833-10529	833-10624	833-10915	833-10407
	10	833-10030	833-10530	833-10625	833-10916	833-10408
	15	833-10031	833-10531	833-10626	833-10917	

Included: Slider for fixing to the Busbar.

ASK 83.3

Plug-in current transformer



Busbar 1: 3 x 80 x 10 mm
Busbar 2: 3 x 60 x 10 mm
Busbar 3: 3 x 50 x 10 mm
Round conductor: 70 mm
Transformer width: 106 mm
Height: 132,60 mm
Depth: 30 mm

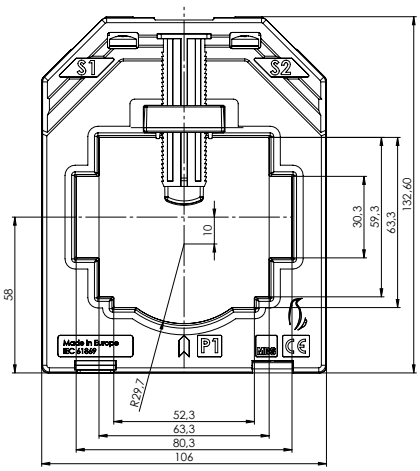

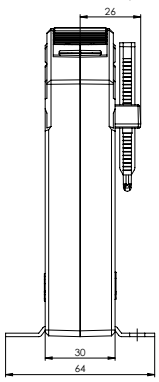

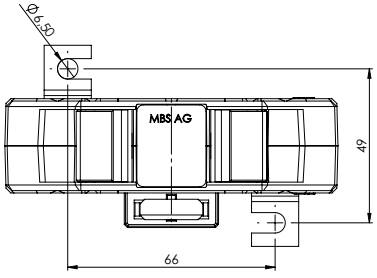

		Secondary current [A] / Class				
Primary current [A]	Burden [VA]	1A Cl. 1 Art.-no	1A Cl. 0,5 Art.-no	1A Cl. 0,5s Art.-no	1A Cl. 0,2 Art.-no	1A Cl. 0,2s Art.-no
500	2.5	833-10200	833-10700			
	5	833-10201				
600	2.5	833-10202	833-10701	833-10800		
	5	833-10203	833-10702			
750	2.5	833-10204	833-10703	833-10801		
	5	833-10205	833-10704	833-10802		
	7.5	833-10206	833-10705			
800	2.5	833-10207	833-10706	833-10803	833-10300	
	5	833-10208	833-10707	833-10804		
	7.5	833-10209	833-10708			
1000	2.5	833-10210	833-10709	833-10805	833-10301	
	5	833-10211	833-10710	833-10806		
	10	833-10212	833-10711			
1250	2.5	833-10213	833-10712	833-10807	833-10302	
	5	833-10214	833-10713	833-10808	833-10303	
	10	833-10215	833-10714	833-10809		
1500	2.5	833-10216	833-10715	833-10810	833-10304	833-10100
	5	833-10217	833-10716	833-10811	833-10305	
	10	833-10218	833-10717	833-10812	833-10306	
1600	2.5	833-10219	833-10718	833-10813	833-10307	833-10101
	5	833-10220	833-10719	833-10814	833-10308	
	10	833-10221	833-10720	833-10815	833-10309	

Included: Slider for fixing to the Busbar.

ASK 83.4

Plug-in current transformer



Selectable positions of the secondary terminals allow flexible positions of installation.

Busbar 1	84 x 34 mm
Round conductor	34 mm
Transformer width	96 mm
Height	117 mm
Depth	68 mm

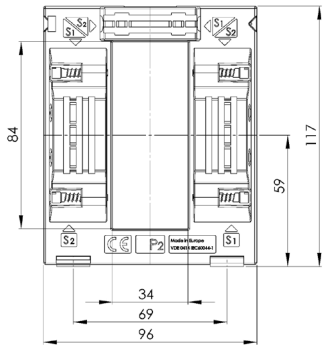

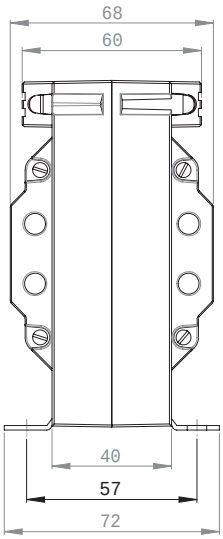

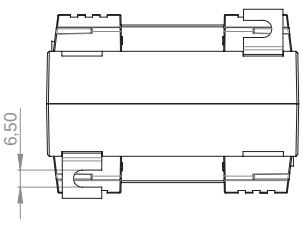

	Secondary current [A] / Class			
Primary current [A]	Burden [VA]	5 A Cl. 1 Art.-no.	5 A Cl. 0,5 Art.-no.	1 A Cl. 1 Art.-no.	1 A Cl. 0,5 Art.-no.
300	1,5	100051-x	100011-x	100251-x	100211-x
	2,5	100052-x	100012-x	100252-x	100212-x
400	2,5	100053-x	100013-x	100253-x	100213-x
	5	100054-x	100014-x	100254-x	100214-x
500	2,5	100055-x	100015-x	100255-x	100215-x
	5	100056-x	100016-x	100256-x	100216-x
600	2,5	100057-x	100017-x	100257-x	100217-x
	5	100058-x	100018-x	100258-x	100218-x
	10	100059-x		100259-x	
750	2,5	100060-x	100019-x	100260-x	100219-x
	5	100061-x	100020-x	100261-x	100220-x
	10	100062-x	100021-x	100262-x	100221-x
	15	100063-x		100263-x	
800	2,5	100064-x	100022-x	100264-x	100222-x
	5	100065-x	100023-x	100265-x	100223-x
	10	100066-x	100024-x	100266-x	100224-x
	15	100067-x		100267-x	
1000	5	100068-x	100025-x	100268-x	100225-x
	10	100069-x	100026-x	100269-x	100226-x
	15	100070-x	100027-x	100270-x	100227-x
1200	5	100071-x	100028-x	100271-x	100228-x
	10	100072-x	100029-x	100272-x	100229-x
	15	100073-x	100030-x	100273-x	100230-x
1250	5	100074-x	100031-x	100274-x	100231-x
	10	100075-x	100032-x	100275-x	100232-x
	15	100076-x	100033-x	100276-x	100233-x
1500	5	100077-x	100034-x	100277-x	100234-x
	10	100078-x	100035-x	100278-x	100235-x
	15	100079-x	100036-x	100279-x	100236-x
1600	5	100080-x	100037-x	100280-x	100237-x
	10	100081-x	100038-x	100281-x	100238-x
	15	100082-x	100039-x	100282-x	100239-x
	30	100083-x		100283-x	
1800	10	100084-x	100040-x	100284-x	100240-x
	15	100085-x	100041-x	100285-x	100241-x
	30	100086-x		100286-x	
2000	10	100087-x	100042-x	100287-x	100242-x
	15	100088-x	100043-x	100288-x	100243-x
	30	100089-x		100289-x	

		Art.-no.
	**Snap-on mounting**	–
	**Sealed shutter**	–

ASK 83.4

Plug-in current transformer



The secondary terminals of the current transformer type ASK 83.4 can be realized in 6 different positions. Please be so kind and choose with your order.

Connection

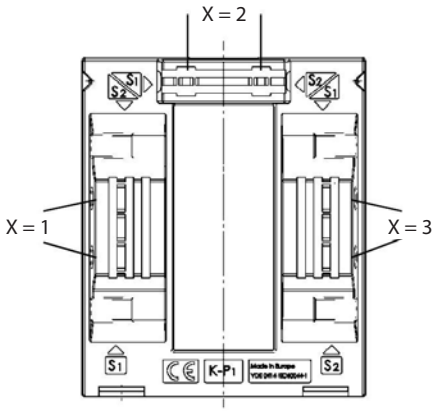

Connection

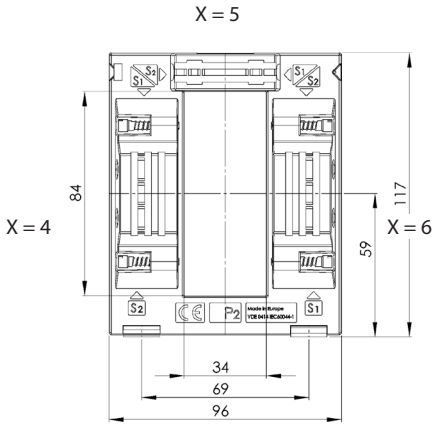

Order example

ASK 83.4 800/5A 10VA Cl.1
Connection option K-P_1 (h.b.) top
Art.-no. 100066-2

ASK 101.4

Plug-in current transformer



Busbar 1	100 x 10 mm
Busbar 2	2 x 80 x 10 mm
Round conductor	70 mm
Transformer width	130 mm
Height	141 mm
Depth	58 mm

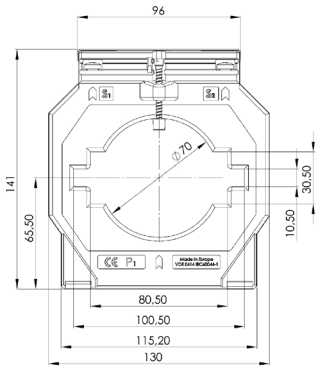

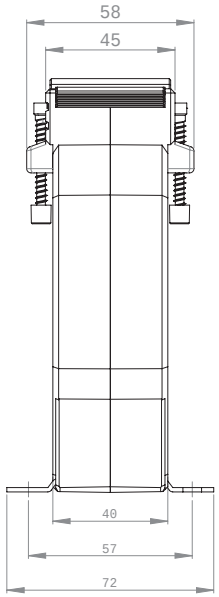

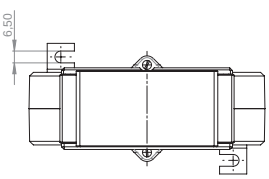

	Secondary current [A] / Class			
Primary current [A]	Burden [VA]	5 A Cl. 1 Art.-no.	5 A Cl. 0,5 Art.-no.	1 A Cl. 1 Art.-no.	1 A Cl. 0,5 Art.-no.
500	2,5		22009		22209
	5	22076	22010	22276	22210
	10	22077		22277	
600	2,5		22011		22211
	5	22038	22012	22238	22212
	10	22039		22239	
750	2,5		22013		22213
	5	22040	22014	22240	22214
	10	22041	22078	22241	22281
800	5	22042	22015	22242	22215
	10	22043	22016	22243	22216
	15	22044		22244	
1000	5	22045	22017	22245	22217
	10	22046	22018	22246	22218
	15	22047		22247	
1200	5	22048	22019	22248	22219
	10	22049	22020	22249	22220
	15	22050		22250	
	30	22051		22251	
1250	5	22052	22021	22252	22221
	10	22053	22022	22253	22222
	15	22054		22254	
	30	22055		22255	
1500	5	22056	22023	22256	22223
	10	22057	22024	22257	22224
	15	22058	22025	22258	22279
	30	22059		22259	
1600	5		22026		22226
	10	22060	22027	22260	22227
	15	22061	22028	22261	22228
	30	22062		22262	
1800	5		22029		22229
	10	22064	22030	22264	22230
	15	22065	22031	22265	22231
	30	22066		22266	
2000	5		22032		22232
	10	22068	22033	22268	22233
	15	22069	22034	22269	22234
	30	22070	22118	22270	22280

		Art.-no.
	**Snap-on mounting**	**–**
	**Sealed shutter, type C**	**59042**

ASK 101.4 2U

Plug-in current transformer, secondary reconnectable



Busbar 1	100 x 10 mm
Busbar 2	2 x 80 x 10 mm
Round conductor	70 mm
Transformer width	130 mm
Height	141 mm
Depth	58 mm

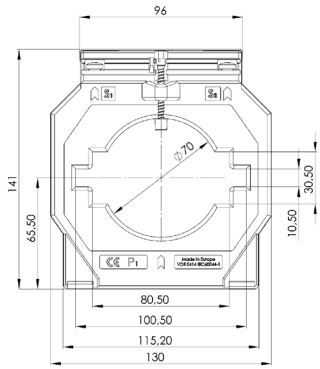

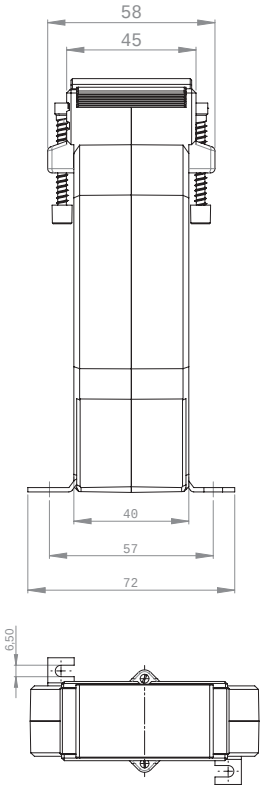

	Secondary current [A] / Class	
Primary current [A] / Burden [VA]	5 A Cl. 1 Art.-no.	1 A Cl. 1 Art.-no.
1200-600 / 10-5	22120	22320
1200-600 / 15-7,5	22121	22321
1500-750 / 10-5	22122	22322
1500-750 / 15-7,5	22123	22323
1600-800 / 10-5	22124	22324
1600-800 / 15-7,5	22125	22325
1600-800 / 30-15	22126	22326
2000-1000 / 10-5	22127	22327
2000-1000 / 15-7,5	22128	22328
2000-1000 / 30-15	22129	22329

		Art.-no.
	**Snap-on mounting**	**–**
	**Sealed shutter, type C**	**59042**

ASK 103.3

Plug-in current transformer



Busbar 1	2 x 100 x 10 mm
Busbar 2	3 x 80 x 10 mm
Round conductor	85 mm
Transformer width	172 mm
Height	184,8 mm
Depth	52 mm

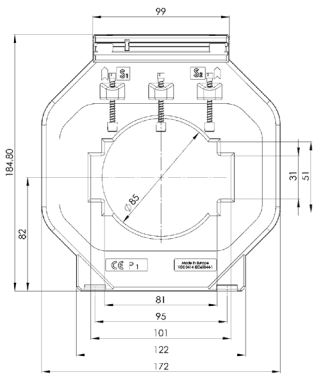

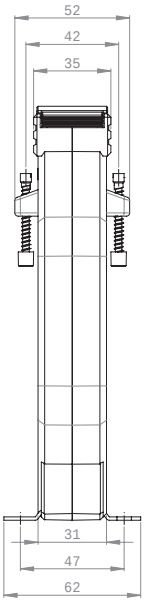

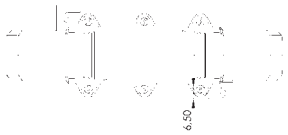

	Secondary current [A] / Class			
Primary current [A]	Burden [VA]	5 A Cl. 1 Art.-no.	5 A Cl. 0,5 Art.-no.	1 A Cl. 1 Art.-no.	1 A Cl. 0,5 Art.-no.
750	2,5		23011		23211
	5	23036	23076	23236	23276
	10	23037		23237	
800	2,5		23012		23212
	5	23038	23013	23238	23213
	10	23039	23077	23239	23277
	15	23040		23240	
1000	5	23041	23014	23241	23214
	10	23042	23015	23242	23215
	15	23043	23016	23243	23216
1200	5	23044	23017	23244	23217
	10	23045	23018	23245	23218
	15	23046	23019	23246	23219
	30	23047		23247	
1250	5	23048	23020	23248	23220
	10	23049	23021	23249	23221
	15	23050	23022	23250	23222
	30	23051		23251	
1500	10	23052	23023	23252	23223
	15	23053	23024	23253	23224
	30	23054		23254	
1600	10	23056	23025	23256	23225
	15	23057	23026	23257	23226
	30	23058		23258	
2000	10	23060	23027	23260	23227
	15	23061	23028	23261	23228
	30	23062	23029	23262	23229
2500	10	23064	23030	23264	23230
	15	23065	23031	23265	23231
	30	23066	23032	23266	23232
3000	10	23068	23033	23268	23233
	15	23069	23034	23269	23234
	30	23070	23035	23270	23235

		Art.-no.
	**Snap-on mounting**	**–**
	**Sealed shutter, type A**	**59040**



Busbar 1	103 x 41 mm
Round conductor	40 mm
Transformer width	99 mm
Height	150 mm
Depth	58 mm

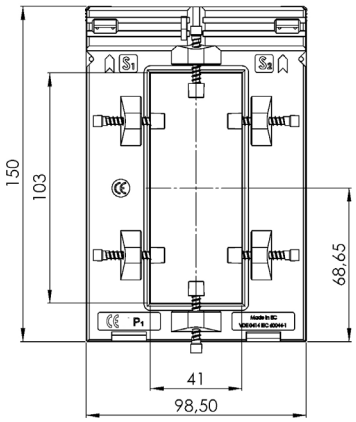

ASK 103.41

Plug-in current transformer

		Secondary current [A] / Class			
Primary current [A]	Burden [VA]	5 A Cl. 1 Art.-no.	5 A Cl. 0,5 Art.-no.	1 A Cl. 1 Art.-no.	1 A Cl. 0,5 Art.-no.
400	2,5	97051	97021	97251	97221
	5	97052		97252	
500	2,5	97053	97023	97253	97223
	5	97054		97254	
600	2,5	97055	97025	97255	97225
	5	97056		97256	
750	2,5	97057	97027	97257	97227
	5	97058		97258	
800	5	97059	97029	97259	97229
	10	97060		97260	
1000	10	97061	97031	97261	97231
	15	97062		97262	
1200	10	97063	97033	97263	97233
	15	97064		97264	
1250	10	97065	97035	97265	97235
	15	97066		97266	
1500	15	97067	97037	97267	97237
	30	97068		97268	
2000	15	97069	97039	97269	97239
	30	97070		97270	

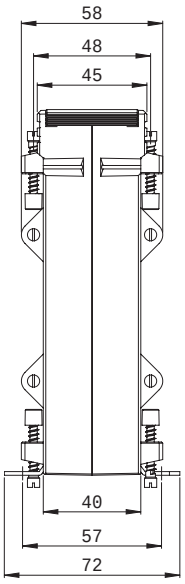

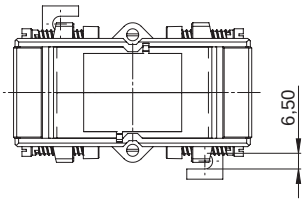

ASK 103.41 2U

Plug-in current transformer, secondary reconnectable

		Secondary current [A] / Class			
Primary current [A]	Burden [VA]	5 A Cl. 1 Art.-no.	5 A Cl. 0,5 Art.-no.	1 A Cl. 1 Art.-no.	1 A Cl. 0,5 Art.-no.
1000-500	5-2,5	97081	97071	97281	97271
1200-600	5-2,5	97082	97072	97282	97272
1500-750	10-5	97083	97073	97283	97273
	15-7,5	97084		97284	
2000-1000	15-7,5	97085	97075	97285	97275
	30-15	97086		97286	

		Art.-no.
	**Snap-on mounting**	–
	**Sealed shutter**	–

ASK 105.3

Plug-in current transformer



Busbar: 100 x 56 mm
Transformer width: 129 mm
Height: 156 mm
Depth: 30 mm

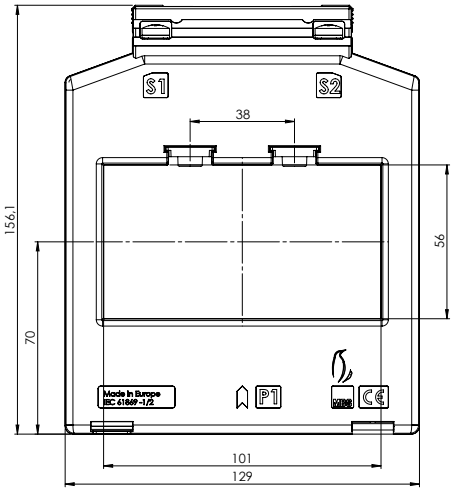

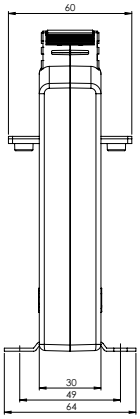

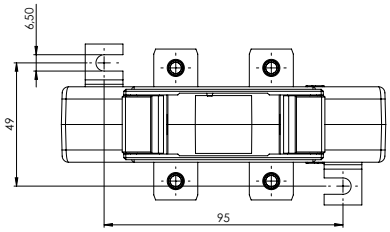

		Secondary current [A] / Class				
Primary current [A]	Burden [VA]	5A Cl. 1 Art.-no.	5A Cl. 0,5 Art.-no.	5A Cl. 0,5s Art.-no.	5A Cl. 0,2 Art.-no.	5A Cl. 0,2s Art.-no.
400	2.5	1053-10000				
	3.75	1053-10001				
	5	1053-10002				
500	2.5	1053-10003	1053-10500			
	3.75	1053-10004	1053-10501			
	5	1053-10005	1053-10502			
600	2.5	1053-10006	1053-10503			
	3.75	1053-10007	1053-10504			
	5	1053-10008	1053-10505			
	7.5	1053-10009				
	10	1053-10010				
750	2.5	1053-10011	1053-10506	1053-10600		
	3.75	1053-10012	1053-10507			
	5	1053-10013	1053-10508			
	7.5	1053-10014				
	10	1053-10015				
800	2.5	1053-10016	1053-10509	1053-10601		
	5	1053-10017	1053-10510			
	7.5	1053-10018	1053-10511			
	10	1053-10019				
1000	2.5	1053-10020	1053-10512	1053-10602		
	5	1053-10021	1053-10513	1053-10603		
	7.5	1053-10022	1053-10514	1053-10604		
	10	1053-10023	1053-10515	1053-10605		
1250	2.5	1053-10024	1053-10516	1053-10606		
	5	1053-10025	1053-10517	1053-10607		
	10	1053-10026	1053-10518	1053-10608		
	15	1053-10027				
1500	2.5	1053-10028	1053-10520	1053-10609	1053-10905	
	5	1053-10029	1053-10521	1053-10610	1053-10906	
	10	1053-10030	1053-10522	1053-10611	1053-10907	
	15	1053-10031	1053-10523	1053-10612		
1600	2.5	1053-10032	1053-10524	1053-10613	1053-10908	
	5	1053-10033	1053-10525	1053-10614	1053-10909	
	10	1053-10034	1053-10526	1053-10615	1053-10910	
	15	1053-10035	1053-10527	1053-10616		
2000	2.5	1053-10036	1053-10528	1053-10617	1053-10911	1053-10400
	5	1053-10037	1053-10529	1053-10618	1053-10912	1053-10401
	7.5	1053-10038	1053-10530	1053-10619	1053-10913	
	10	1053-10039	1053-10531	1053-10620	1053-10914	
	15	1053-10040	1053-10532	1053-10621		

ASK 105.3



Busbar: 100 x 56 mm
Transformer width: 129 mm
Height: 156 mm
Depth: 30 mm

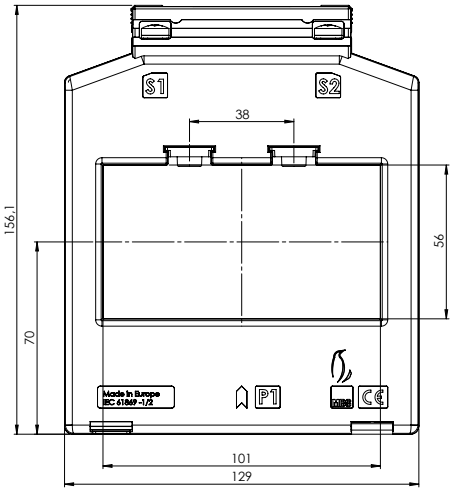

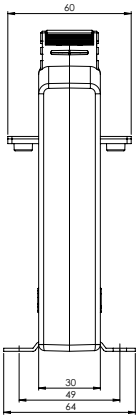

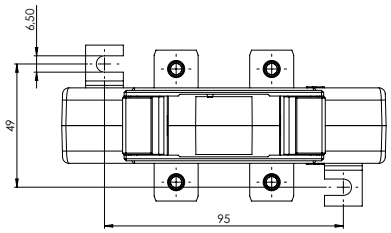

		Secondary current [A] / Class				
Primary current [A]	Burden [VA]	5A Cl. 1 Art.-no.	5A Cl. 0,5 Art.-no.	5A Cl. 0,5s Art.-no.	5A Cl. 0,2 Art.-no.	5A Cl. 0,2s Art.-no.
2500	2.5			1053-10622	1053-10916	1053-10402
	5	1053-10041	1053-10533	1053-10623	1053-10917	1053-10403
	7.5	1053-10042	1053-10534	1053-10624	1053-10918	1053-10404
	10	1053-10043	1053-10535	1053-10625	1053-10919	1053-10405
	15	1053-10044	1053-10536	1053-10626	1053-10920	
3000	5	1053-10045	1053-10537	1053-10627	1053-10921	1053-10406
	10	1053-10046	1053-10538	1053-10628	1053-10922	1053-10407
	15	1053-10047	1053-10539	1053-10629	1053-10923	1053-10408
4000	2.5	1053-10048				
	5	1053-10049	1053-10540	1053-10630	1053-10924	1053-10409
	10	1053-10050	1053-10541	1053-10631	1053-10925	1053-10410
	15	1053-10051	1053-10542	1053-10632	1053-10926	1053-10411

		Secondary current [A] / Class				
Primary current [A]	Burden [VA]	1A Cl. 1 Art.-no.	1A Cl. 0,5 Art.-no.	1A Cl. 0,5s Art.-no.	1A Cl. 0,2 Art.-no.	1A Cl. 0,2s Art.-no.
400	2.5	1053-10200				
	3.75	1053-10201				
	5	1053-10202				
500	2.5	1053-10203	1053-10700			
	3.75	1053-10204	1053-10701			
	5	1053-10205	1053-10702			
600	2.5	1053-10206	1053-10703			
	3.75	1053-10207	1053-10704			
	5	1053-10208	1053-10705			
	7.5	1053-10209				
	10	1053-10210				
750	2.5	1053-10211	1053-10706	1053-10800		
	3.75	1053-10212	1053-10707			
	5	1053-10213	1053-10708			
	7.5	1053-10214				
	10	1053-10215				
800	2.5	1053-10216	1053-10709	1053-10801		
	5	1053-10217	1053-10710			
	7.5	1053-10218				
	10	1053-10219				
1000	2.5	1053-10220	1053-10711	1053-10802	1053-10300	
	5	1053-10221	1053-10712	1053-10803	1053-10301	
	7.5	1053-10222	1053-10713	1053-10804		
	10	1053-10223	1053-10714	1053-10805		
1250	2.5	1053-10224	1053-10715	1053-10806	1053-10302	
	5	1053-10225	1053-10716	1053-10807	1053-10303	
	10	1053-10226	1053-10717	1053-10808		
	15	1053-10227	1053-10718			

ASK 105.3

Plug-in current transformer



Busbar: 100 x 56 mm
Transformer width: 129 mm
Height: 156 mm
Depth: 30 mm

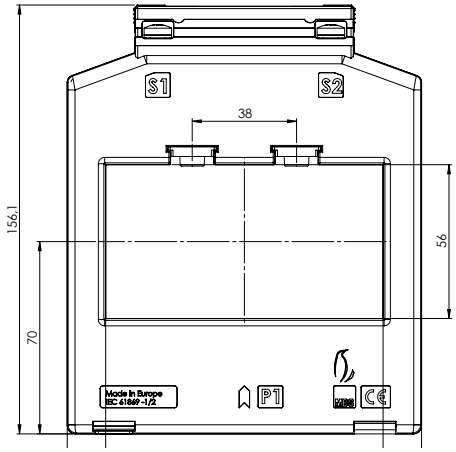

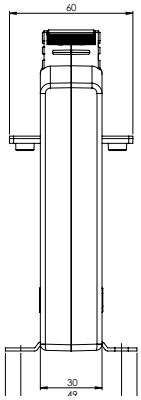

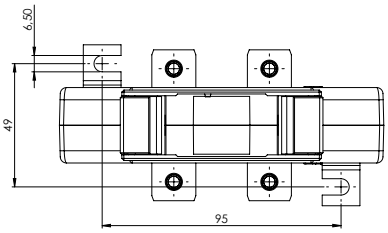

		Secondary current [A] / Class				
Primary current [A]	Burden [VA]	1A Cl. 1 Art.-no.	1A Cl. 0,5 Art.-no.	1A Cl. 0,5s Art.-no.	1A Cl. 0,2 Art.-no.	1A Cl. 0,2s Art.-no.
1500	2.5	1053-10228	1053-10719	1053-10809	1053-10304	
	5	1053-10229	1053-10720	1053-10810	1053-10305	
	10	1053-10230	1053-10721	1053-10811	1053-10306	
	15	1053-10231	1053-10722	1053-10812		
1600	2.5	1053-10232	1053-10723	1053-10813	1053-10307	
	5	1053-10233	1053-10724	1053-10814	1053-10308	
	10	1053-10234	1053-10725	1053-10815	1053-10309	
	15	1053-10235	1053-10726	1053-10816		
2000	2.5	1053-10236	1053-10727	1053-10817	1053-10310	1053-10100
	5	1053-10237	1053-10728	1053-10818	1053-10311	1053-10101
	7.5	1053-10238	1053-10729	1053-10819	1053-10312	
	10	1053-10239	1053-10730	1053-10820	1053-10313	
	15	1053-10240	1053-10731	1053-10821	1053-10314	
2500	2.5	1053-10241	1053-10732	1053-10822	1053-10315	1053-10102
	5	1053-10242	1053-10733	1053-10823	1053-10316	1053-10103
	7.5	1053-10243	1053-10734	1053-10824	1053-10317	1053-10104
	10	1053-10244	1053-10735	1053-10825	1053-10318	1053-10105
	15	1053-10245		1053-10826	1053-10319	
3000	5	1053-10246	1053-10736	1053-10827	1053-10320	1053-10106
	10	1053-10247	1053-10737	1053-10828	1053-10321	1053-10107
	15	1053-10248	1053-10738	1053-10829	1053-10322	

ASK 105.6

Plug-in current transformer



Busbar 1	100 x 55 mm
Round conductor	55 mm
Transformer width	129 mm
Height	167 mm
Depth	78 mm

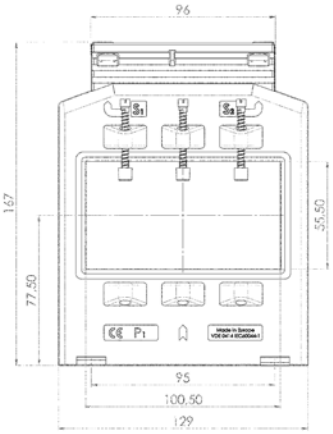

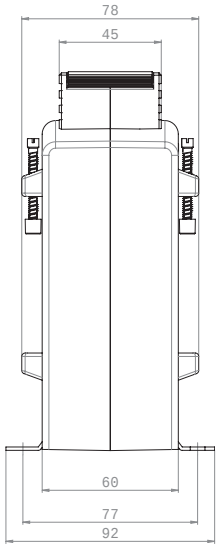

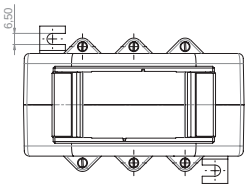

	Secondary current [A] / Class				
Primary current [A]	Burden [VA]	5 A Cl. 1 Art.-no.	5 A Cl. 0,5 Art.-no.	5 A Cl. 0,2s Art.-no.	1 A Cl. 1 Art.-no.	1 A Cl. 0,5 Art.-no.
600	2,5		86083	V55-2204D		86283
	5	86092	86084		86292	86284
	10	86093			86293	
750	2,5		86086	V55-2304D		86286
	5	86095	86087	V55-2304F	86295	86287
	10	86096	86157		86296	86357
800	5	86097	86089	V55-2404F	86297	86289
	10	86098	86090		86298	86290
1000	2,5		86158			
	5	86051	86011	V55-2504F	86251	86211
	10	86052	86159	V55-2504H	86252	86359
	15	86113	86160		86299	86360
1200	5	86053	86013	V55-2604F	86253	86213
	10	86054	86014	V55-2604H	86254	86214
	15	86055	86015		86255	86215
1250	5	86056	86016	V55-2704F	86256	86216
	10	86057	86017	V55-2704H	86257	86217
	15	86058	86018	V55-2704J	86258	86218
1500	5	86059	86019	V55-2804F	86259	86219
	10	86060	86020	V55-2804H	86260	86220
	15	86061	86021	V55-2804J	86261	86221
	30	86062	86163		86262	86363
1600	5	86110	86164	V55-2904F		
	10	86142	86165	V55-2904H	86331	86338
	15	86101	86149	V55-2904J	86330	86339
	30	86138	86166		86337	86340
1800	5	86063	86023		86263	86223
	10	86064	86024		86264	86224
	15	86065	86025		86265	86225
	30	86066			86266	
2000	5		86167	V55-3004F		
	10	86067	86027	V55-3004H	86267	86227
	15	86068	86028	V55-3004J	86268	86228
	30	86069	86029		86269	86229
2400	10		86169	V55-3104H		
	15		86170	V55-3104J		
	30		86171			
2500	5		86172	V55-3204F		
	10	86071	86031	V55-3204H	86271	86231
	15	86072	86032	V55-3204J	86272	86232
	30	86073	86033		86273	86233
3000	5		86173			
	10	86075	86035		86275	86235
	15	86076	86036		86276	86236

		Art.-no.
	**Snap-on mounting**	**–**
	**Sealed shutter, type C**	**59042**

ASK 105.6N

Plug-in current transformer



Busbar 1	100 x 55 mm
Round conductor	55 mm
Transformer width	129 mm
Height	214 mm
Depth	78 mm

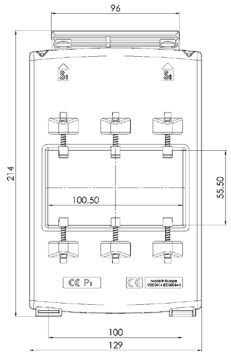

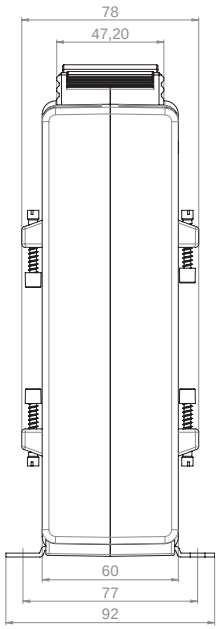

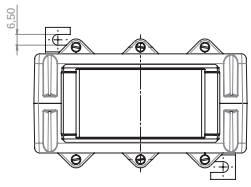

	Secondary current [A] / Class			
Primary current [A] / Burden [VA]	5 A Cl. 1 Art.-no.	5 A Cl. 0,5 Art.-no.	1 A Cl. 1 Art.-no.	1 A Cl. 0,5 Art.-no.
2500 / 10	86451	86481	86411	86431
2500 / 15	86452	86482	86412	86432
3000 / 10	86455	86484	86415	86434
3000 / 15	86456	86485	86416	86435
4000 / 10	86459	86487	86419	86437
4000 / 15	86460	86488	86420	86438

		Art.-no.
	**Snap-on mounting**	**–**
	**Sealed shutter, type C**	**59042**

ASK 123.3

Plug-in current transformer



Busbar 1	123 x 30 mm
Busbar 2	3 x 100 x 10 mm
Round conductor	100 mm
Transformer width	172 mm
Height	184,8 mm
Depth	52 mm

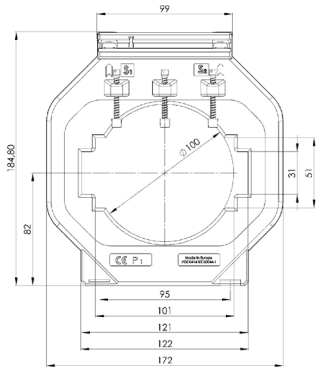

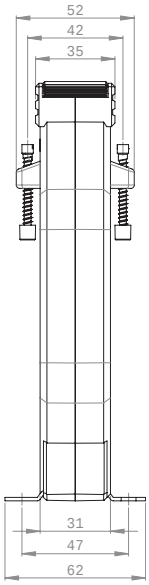

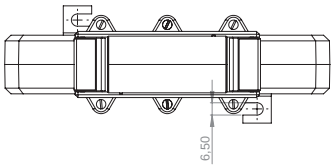

	Secondary current [A] / Class				
Primary current [A]	Burden [VA]	5 A Cl. 1 Art.-no.	5 A Cl. 0,5 Art.-no.	5 A Cl. 0,2s Art.-no.	1 A Cl. 1 Art.-no.	1 A Cl. 0,5 Art.-no.
750	2,5		24127			
	5		24128			
	10		24129			
1000	2,5		24010	V56-2504D		
	5	24037	24011	V56-2504F	24237	24211
	10	24038	24126		24238	24125
1200	5	24039	24012	V56-2604F	24239	24212
	10	24040	24013		24240	24213
	15	24041	24014		24241	24214
1250	5	24042	24015	V56-2704F	24242	24215
	10	24043	24016	V56-2704H	24243	24216
	15	24044	24017		24244	24217
1500	5	24045	24018	V56-2804F	24245	24218
	10	24046	24019	V56-2804H	24246	24219
	15	24047	24020		24247	24220
	30	24048			24248	
1600	5	24112		V56-2904F		
	10	24107		V56-2904H		
	15	24113		V56-2904J		
	30	24108	24131			
1800	5	24049	24021		24249	24221
	10	24050	24022		24250	24222
	15	24051	24023		24251	24223
	30	24052			24252	
2000	5		24024	V56-3004F		24224
	10	24053	24025	V56-3004H	24253	24225
	15	24054	24026	V56-3004J	24254	24226
	30	24055	24027		24255	24227
2500	5		24136	V56-3204F		
	10	24057	24028	V56-3204H	24257	24228
	15	24058	24029	V56-3204J	24258	24229
	30	24059	24030		24259	24230
3000	5		24137	V56-3304F		
	10	24061	24031	V56-3304H	24261	24231
	15	24062	24032	V56-3304J	24262	24232
	30	24063	24033		24263	24233
	45	24064			24264	

		Art.-no.
	**Snap-on mounting**	**–**
	**Sealed shutter, type A**	**59040**

ASK 127.3

Plug-in current transformer



Busbar: 122 x 71 mm
Transformer width: 159 mm
Height: 188 mm
Depth: 30 mm

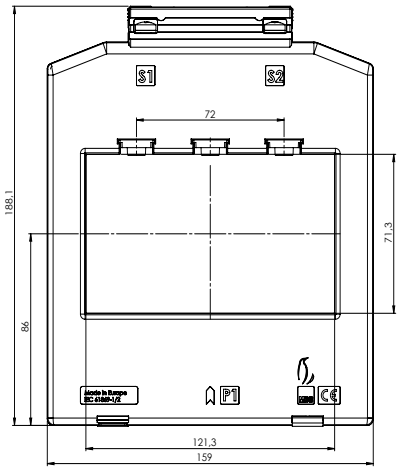

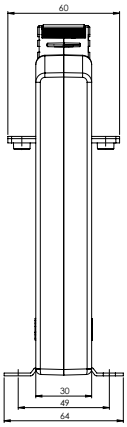

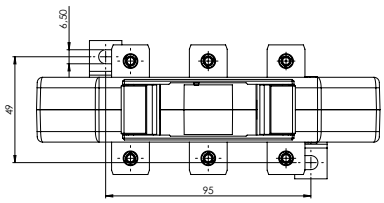

		Secondary current [A] / Class				
Primary current [A]	Burden [VA]	5A Cl. 1 Art.-no.	5A Cl. 0,5 Art.-no.	5A Cl. 0,5s Art.-no.	5A Cl. 0,2 Art.-no.	5A Cl. 0,2s Art.-no.
400	2.5	1273-10000				
	3.75	1273-10001				
	5	1273-10002				
	7.5					
	10					
500	2.5	1273-10003	1273-10500			
	3.75	1273-10004	1273-10501			
	5	1273-10005				
	10					
600	2.5	1273-10006	1273-10502			
	3.75	1273-10007	1273-10503			
	5	1273-10008	1273-10504			
	10	1273-10009				
750	2.5	1273-10010	1273-10505			
	3.75	1273-10011	1273-10506			
	5	1273-10012	1273-10507			
	7.5	1273-10013	1273-10508			
	10	1273-10014	1273-10509			
800	2.5	1273-10015	1273-10510			
	3.75	1273-10016	1273-10511			
	5	1273-10017	1273-10512			
	7.5	1273-10018	1273-10513			
	10	1273-10019	1273-10514			
1000	2.5	1273-10020	1273-10515			
	5	1273-10021	1273-10516			
	7.5	1273-10022	1273-10517			
	10	1273-10023	1273-10518			
	15	1273-10024	1273-10519			
1250	2.5	1273-10025	1273-10520			
	5	1273-10026	1273-10521			
	10	1273-10027	1273-10522			
	15	1273-10028	1273-10523			
1500	2.5	1273-10029	1273-10524			
	5	1273-10030	1273-10525	1273-10600		
	10	1273-10031	1273-10526	1273-10601		
	15	1273-10032	1273-10527			
1600	2.5	1273-10033	1273-10528			
	5	1273-10034	1273-10529	1273-10602		
	10	1273-10035	1273-10530	1273-10603		
	15	1273-10036	1273-10531			

ASK 127.3



Busbar: 122 x 71 mm
Transformer width: 159 mm
Height: 188 mm
Depth: 30 mm

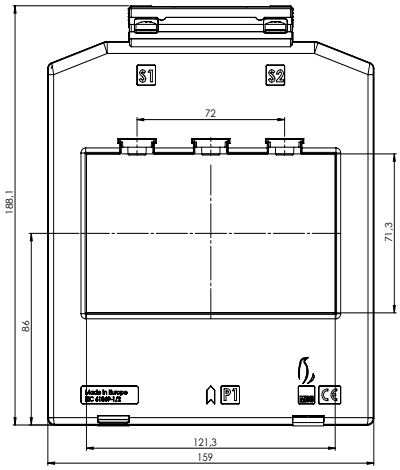

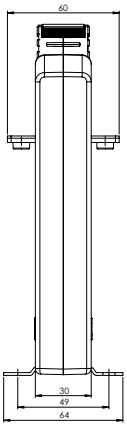

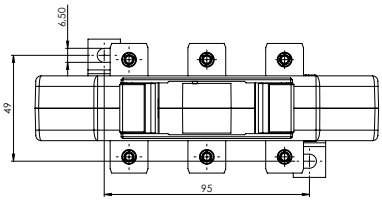

		Secondary current [A] / Class				
Primary current [A]	Burden [VA]	5A Cl. 1 Art.-no.	5A Cl. 0,5 Art.-no.	5A Cl. 0,5s Art.-no.	5A Cl. 0,2 Art.-no.	5A Cl. 0,2s Art.-no.
2000	2.5	1273-10037	1273-10532			
	5	1273-10038	1273-10533	1273-10604	1273-10900	
	10	1273-10039	1273-10534	1273-10605	1273-10901	
	15	1273-10040	1273-10535	1273-10606		
2500	2.5	1273-10041	1273-10536			
	5	1273-10042	1273-10537	1273-10607	1273-10902	1273-10400
	10	1273-10043	1273-10538	1273-10608	1273-10903	
	15	1273-10044	1273-10539	1273-10609		
3000	2.5	1273-10045	1273-10540			
	5	1273-10046	1273-10541	1273-10610	1273-10904	1273-10401
	10	1273-10047	1273-10542	1273-10611	1273-10905	1273-10402
	15	1273-10048	1273-10543	1273-10612	1273-10906	
4000	5	1273-10049	1273-10544	1273-10613	1273-10907	1273-10403
	10	1273-10050	1273-10545	1273-10614	1273-10908	1273-10404
	15	1273-10051	1273-10546	1273-10615	1273-10909	1273-10405

		Secondary current [A] / Class				
Primary current [A]	Burden [VA]	1A Cl. 1 Art.-no.	1A Cl. 0,5 Art.-no.	1A Cl. 0,5s Art.-no.	1A Cl. 0,2 Art.-no.	1A Cl. 0,2s Art.-no.
400	2.5	1273-10200				
	3.75	1273-10201				
	5	1273-10202				
	7.5					
	10					
500	2.5	1273-10203	1273-10700			
	3.75	1273-10204				
	5	1273-10205				
	10	1273-10206				
600	2.5	1273-10207	1273-10701			
	3.75	1273-10208	1273-10702			
	5	1273-10209	1273-10703			
	10	1273-10210				
750	2.5	1273-10211	1273-10704			
	3.75	1273-10212	1273-10705			
	5	1273-10213	1273-10706			
	7.5					
	10					
800	2.5	1273-10214	1273-10707			
	3.75	1273-10215	1273-10708			
	5	1273-10216	1273-10709			
	7.5	1273-10217				
	10	1273-10218				

ASK 127.3

Plug-in current transformer



Busbar: 122 x 71 mm
Transformer width: 159 mm
Height: 188 mm
Depth: 30 mm

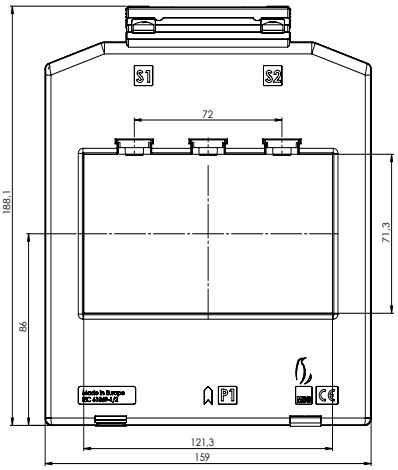

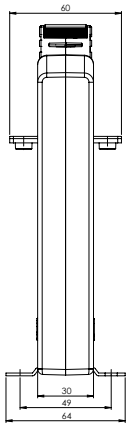

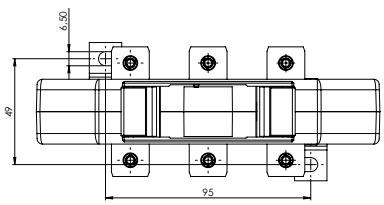

		Secondary current [A] / Class				
Primary current [A]	Burden [VA]	1A Cl. 1 Art.-no.	1A Cl. 0,5 Art.-no.	1A Cl. 0,5s Art.-no.	1A Cl. 0,2 Art.-no.	1A Cl. 0,2s Art.-no.
1000	2.5	1273-10219	1273-10710			
	5	1273-10220	1273-10711			
	7.5	1273-10221	1273-10712			
	10	1273-10222	1273-10713			
	15	1273-10223				
1250	2.5	1273-10224	1273-10714			
	5	1273-10225	1273-10715			
	10	1273-10226	1273-10716			
	15	1273-10227	1273-10717			
1500	2.5	1273-10228	1273-10718			
	5	1273-10229	1273-10719	1273-10800		
	10	1273-10230	1273-10720	1273-10801		
	15	1273-10231	1273-10721			
1600	2.5	1273-10232	1273-10722			
	5	1273-10233	1273-10723	1273-10802		
	10	1273-10234	1273-10724	1273-10803		
	15	1273-10235	1273-10725			
2000	2.5	1273-10236	1273-10726			
	5	1273-10237	1273-10727	1273-10804	1273-10300	
	10	1273-10238	1273-10728	1273-10805	1273-10301	
	15	1273-10239	1273-10729	1273-10806		
2500	2.5	1273-10240	1273-10730			
	5	1273-10241	1273-10731	1273-10807	1273-10302	1273-10100
	10	1273-10242	1273-10732	1273-10808	1273-10303	
	15	1273-10243	1273-10733	1273-10809		
3000	2.5	1273-10244	1273-10734			
	5	1273-10245	1273-10735	1273-10810	1273-10304	1273-10101
	10	1273-10246	1273-10736	1273-10811	1273-10305	1273-10102
	15	1273-10247	1273-10737	1273-10812	1273-10306	
4000	5	1273-10248	1273-10738	1273-10813	1273-10307	1273-10103
	10	1273-10249	1273-10739	1273-10814	1273-10308	1273-10104
	15	1273-10250	1273-10740	1273-10815	1273-10309	1273-10105

ASK 127.4

Plug-in current transformer



Busbar 1	120 x 70 mm
Round conductor	70 mm
Transformer width	159 mm
Height	195,3 mm
Depth	58 mm

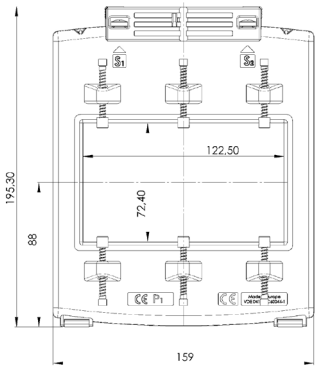

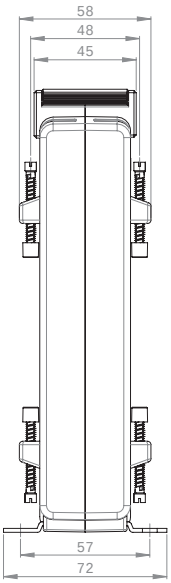

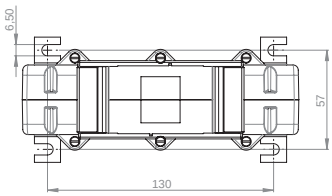

	Secondary current [A] / Class			
Primary current [A] / Burden [VA]	5 A Cl. 1 Art.-no.	5 A Cl. 0,5 Art.-no.	1 A Cl. 1 Art.-no.	1 A Cl. 0,5 Art.-no.
1000 / 5	87540	87510	87640	87610
1000 / 10	87541	87511	87641	87611
1200 / 5	87542	87512	87642	87612
1200 / 10	87543	87513	87643	87613
1200 / 15	87544	87514	87644	87614
1250 / 10	87545	87515	87645	87615
1250 / 15	87546	87516	87646	87616
1250 / 30	87547	87517	87647	87617
1500 / 10	87548	87518	87648	87618
1500 / 15	87549	87519	87649	87619
1500 / 30	87550	87520	87650	87620
1600 / 10	87551	87521	87651	87621
1600 / 15	87552	87522	87652	87622
1600 / 30	87553	87523	87653	87623
1800 / 10	87554	87524	87654	87624
1800 / 15	87555	87525	87655	87625
1800 / 30	87556	87526	87656	87626
2000 / 10	87557	87527	87657	87627
2000 / 15	87558	87528	87658	87628
2000 / 30	87559	87529	87659	87629
2500 / 10	87561	87531	87661	87631
2500 / 15	87562	87532	87662	87632
2500 / 30	87563	87533	87663	87633

		Art.-no.
	**Snap-on mounting**	**–**
	**Sealed shutter, type C**	**59042**

ASK 127.6

Plug-in current transformer



Busbar 1	120 x 70 mm
Round conductor	70 mm
Transformer width	205 mm
Height	203 mm
Depth	78 mm

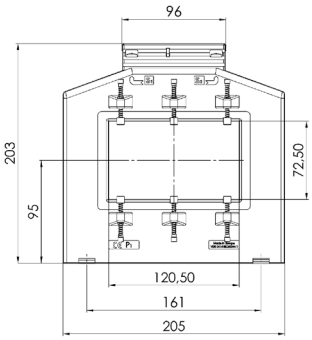

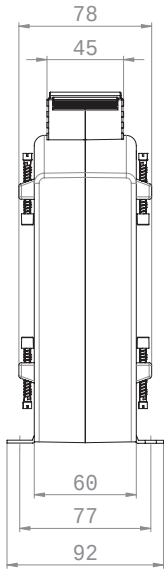

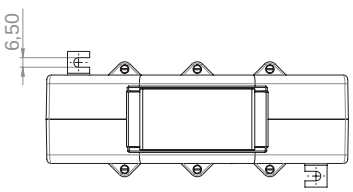

	Secondary current [A] / Class			
Primary current [A]	Burden [VA]	5 A Cl. 1 Art.-no.	5 A Cl. 0,5 Art.-no.	1 A Cl. 1 Art.-no.	1 A Cl. 0,5 Art.-no.
1000	5	87055	87011	87255	87211
	10	87056		87256	
1200	5	87057	87013	87257	87213
	10	87058	87014	87258	87214
	15	87059		87259	
1250	5	87060	87016	87260	87216
	10	87061	87017	87261	87217
	15	87062	87018	87262	87218
	30	87063	87019	87263	87219
1500	5	87064	87020	87264	87220
	10	87065	87021	87265	87221
	15	87066	87022	87266	87222
	30	87067	87023	87267	87223
1800	5	87068	87024	87268	87224
	10	87069	87025	87269	87225
	15	87070	87026	87270	87226
	30	87071	87027	87271	87227
2000	10	87072	87028	87272	87228
	15	87073	87029	87273	87229
	30	87074	87030	87274	87230
2500	10	87076	87032	87276	87232
	15	87077	87033	87277	87233
	30	87078	87034	87278	87234
	45	87079		87279	
3000	10	87081	87036	87281	87236
	15	87082	87037	87282	87237
	30	87083	87038	87283	87238
	45	87084		87284	
4000	10	87085	87040	87285	87240
	15	87086	87041	87286	87241
	30	87087	87042	87287	87242
	45	87088		87288	
5000	10	87089	87044	87289	87244
	15	87090	87045	87290	87245
	30	87091	87046	87291	87246
	45	87092		87292	
6000	10	87093	87048	87293	87248
	15	87094	87049	87294	87249
	30	87095	87050	87295	87250
	45	87096		87296	

		Art.-no.
	**Snap-on mounting**	**–**
	**Sealed shutter, type C**	**59042**

ASK 128.4

Plug-in current transformer



Busbar 1	128 x 38 mm
Round conductor	38 mm
Transformer width	100 mm
Height	175 mm
Depth	58 mm

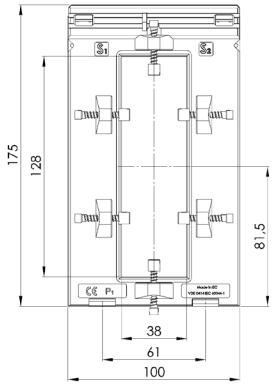

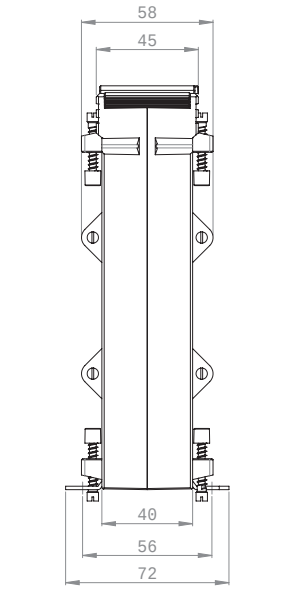

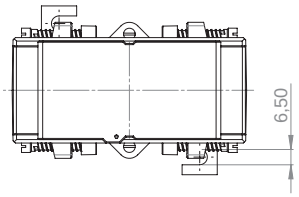

	Secondary current [A] / Class			
Primary current [A]	Burden [VA]	5 A Cl. 1 Art.-no.	5 A Cl. 0,5 Art.-no.	1 A Cl. 1 Art.-no.	1 A Cl. 0,5 Art.-no.
400	2,5	94041	94011	94241	94211
	5	94042		94242	
500	2,5	94043	94013	94243	94213
	5	94044		94244	
600	2,5	94045	94015	94245	94215
	5	94046		94246	
750	2,5	94047	94017	94247	94217
	5	94048		94248	
800	5	94049	94019	94249	94219
	10	94050		94250	
1000	10	94051	94021	94251	94221
	15	94052		94252	
1200	10	94053	94023	94253	94223
	15	94054		94254	
1250	10	94055	94025	94255	94225
	15	94056		94256	
1500	15	94057	94027	94257	94227
	30	94058		94258	
2000	15	94059	94029	94259	94229
	30	94060		94260	
2500	15	94061	94031	94261	94231
	30	94062		94262	

		Art.-no.
	**Snap-on mounting**	**–**
	**Sealed shutter, type C**	**59042**

ASK 129.10

Plug-in current transformer



Busbar 1	120 x 90 mm
Round conductor	90 mm
Transformer width	250 mm
Height	247 mm
Depth	118 mm

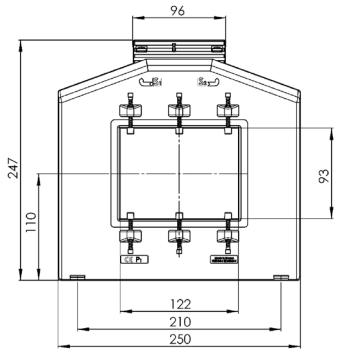

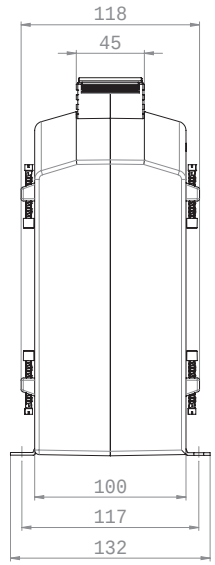

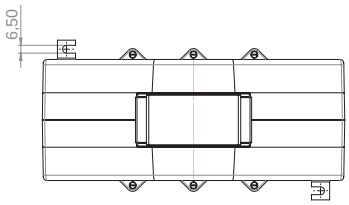

	Secondary current [A] / Class			
Primary current [A]	Burden [VA]	5 A Cl. 1 Art.-no.	5 A Cl. 0,5 Art.-no.	1 A Cl. 1 Art.-no.	1 A Cl. 0,5 Art.-no.
1000	5	88070	88011	88270	88211
	10	88071	88012	88271	88212
	15	88072	88013	88272	88213
1200	5	88073	88014	88273	88214
	10	88074	88015	88274	88215
	15	88075		88275	
1250	5	88076	88017	88276	88217
	10	88077	88018	88277	88218
	15	88078		88278	
1500	10	88079	88020	88279	88220
	15	88080	88021	88280	88221
	30	88081	88022	88281	88222
1600	10	88082	88023	88282	88223
	15	88083	88024	88283	88224
	30	88084	88025	88284	88225
1800	10	88085	88026	88285	88226
	15	88086	88027	88286	88227
	30	88087	88028	88287	88228
2000	10	88088	88029	88288	88229
	15	88089	88030	88289	88230
	30	88090	88031	88290	88231
2500	15	88091	88032	88291	88232
	30	88092	88033	88292	88233
	45	88093		88293	
3000	15	88094	88035	88294	88235
	30	88095	88036	88295	88236
	45	88096		88296	
4000	15	88097	88038	88297	88238
	30	88098	88039	88298	88239
	45	88099	88040	88299	88240
5000	15	88100	88041	88300	88241
	30	88101	88042	88301	88242
	45	88102	88043	88302	88243
6000	15	88103	88044	88303	88244
	30	88104	88045	88304	88245
	45	88105	88046	88305	88246
7500	15	88106	88047	88306	88247
	30	88107	88048	88307	88248
	45	88108	88049	88308	88249

		Art.-no.
	**Snap-on mounting**	**–**
	**Sealed shutter, type C**	**59042**

ASK 130.3

Plug-in current transformer



Busbar 1	130 x 25 mm
Round conductor	25 mm
Transformer width	180 mm
Height	100 mm
Depth	50 mm

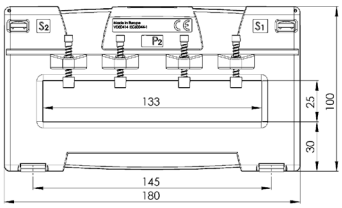

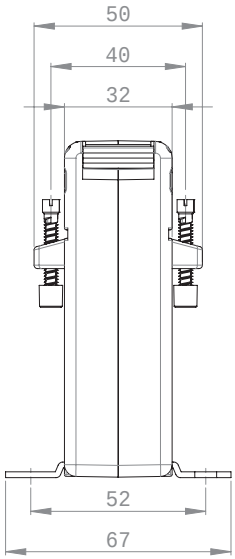

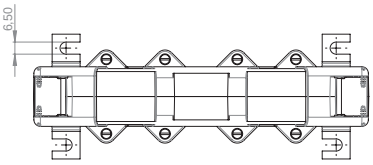

	Secondary current [A] / Class				
Primary current [A]	Burden [VA]	5 A Cl. 1 Art.-no.	5 A Cl. 0,5 Art.-no.	5 A Cl. 0,2s Art.-no.	1 A Cl. 1 Art.-no.	1 A Cl. 0,5 Art.-no.
300	2,5	I50-1900D	I50-1901D		I50-1910D	I50-1911D
	5	I50-1900F	I50-1901F		I50-1910F	I50-1911F
400	2,5	I50-2000D	I50-2001D		I50-2010D	I50-2011D
	5	I50-2000F	I50-2001F		I50-2010F	I50-2011F
	10	I50-2000H			I50-2010H	
500	2,5	I50-2100D	I50-2101D		I50-2110D	I50-2111D
	5	I50-2100F	I50-2101F		I50-2110F	I50-2111F
	10	I50-2100H	I50-2101H		I50-2110H	I50-2111H
600	2,5	I50-2200D	I50-2201D		I50-2210D	I50-2211D
	5	I50-2200F	I50-2201F		I50-2210F	I50-2211F
	10	I50-2200H	I50-2201H		I50-2210H	I50-2211H
	15	I50-2200J			I50-2210J	
750	2,5	I50-2300D	I50-2301D	V50-2304D	I50-2310D	I50-2311D
	5	I50-2300F	I50-2301F		I50-2310F	I50-2311F
	10	I50-2300H	I50-2301H		I50-2310H	I50-2311H
	15	I50-2300J	I50-2301J		I50-2310J	I50-2311J
1000	5	I50-2500F	I50-2501F	V50-2504F	I50-2510F	I50-2511F
	10	I50-2500H	I50-2501H		I50-2510H	I50-2511H
	15	I50-2500J	I50-2501J		I50-2510J	I50-2511J
	30	I50-2500L			I50-2510L	
1200	5	I50-2600F	I50-2601F	V50-2604F	I50-2610F	I50-2611F
	10	I50-2600H	I50-2601H	V50-2604H	I50-2610H	I50-2611H
	15	I50-2600J	I50-2601J		I50-2610J	I50-2611J
	30	I50-2600L			I50-2610L	
1250	5	I50-2700F	I50-2701F	V50-2704F	I50-2710F	I50-2711F
	10	I50-2700H	I50-2701H	V50-2704H	I50-2710H	I50-2711H
	15	I50-2700J	I50-2701J	V50-2704J	I50-2710J	I50-2711J
	30	I50-2700L			I50-2710L	
1500	5	I50-2800F	I50-2801F	V50-2804F	I50-2810F	I50-2811F
	10	I50-2800H	I50-2801H	V50-2804H	I50-2810H	I50-2811H
	15	I50-2800J	I50-2801J	V50-2804J	I50-2810J	I50-2811J
	30	I50-2800L	I50-2801L		I50-2810L	I50-2811L
1600	5	I50-2900F	I50-2901F	V50-2904F	I50-2910F	I50-2911F
	10	I50-2900H	I50-2901H	V50-2904H	I50-2910H	I50-2911H
	15	I50-2900J	I50-2901J	V50-2904J	I50-2910J	I50-2911J
	30	I50-2900L	I50-2901L		I50-2910L	I50-2911L

		Art.-no.
	**Snap-on mounting**	–
	**Sealed shutter**	–

ASK 130.5

Plug-in current transformer



Busbar 1	130 x 30 mm
Round conductor	30 mm
Transformer width	180 mm
Height	120 mm
Depth	68 mm

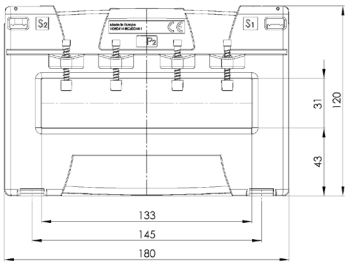

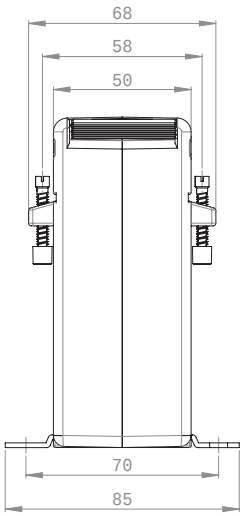

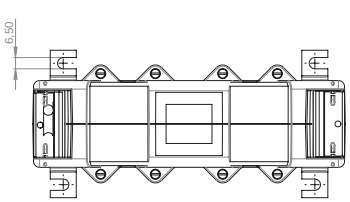

	Secondary current [A] / Class			
Primary current [A]	Burden [VA]	5 A Cl. 1 Art.-no.	5 A Cl. 0,5 Art.-no.	1 A Cl. 1 Art.-no.	1 A Cl. 0,5 Art.-no.
300	2,5	I51-1900D	I51-1901D	I51-1910D	I51-1911D
	5	I51-1900F	I51-1901F	I51-1910F	I51-1911F
	10	I51-1900H	I51-1901H	I51-1910H	I51-1911H
400	2,5	I51-2000D	I51-2001D	I51-2010D	I51-2011D
	5	I51-2000F	I51-2001F	I51-2010F	I51-2011F
	10	I51-2000H	I51-2001H	I51-2010H	I51-2011H
500	2,5	I51-2100D	I51-2101D	I51-2110D	I51-2111D
	5	I51-2100F	I51-2101F	I51-2110F	I51-2111F
	10	I51-2100H	I51-2101H	I51-2110H	I51-2111H
	15	I51-2100J	I51-2101J	I51-2110J	I51-2111J
600	5	I51-2200F	I51-2201F	I51-2210F	I51-2211F
	10	I51-2200H	I51-2201H	I51-2210H	I51-2211H
	15	I51-2200J	I51-2201J	I51-2210J	I51-2211J
750	5	I51-2300F	I51-2301F	I51-2310F	I51-2311F
	10	I51-2300H	I51-2301H	I51-2310H	I51-2311H
	15	I51-2300J	I51-2301J	I51-2310J	I51-2311J
1000	5	I51-2500F	I51-2501F	I51-2510F	I51-2511F
	10	I51-2500H	I51-2501H	I51-2510H	I51-2511H
	15	I51-2500J	I51-2501J	I51-2510J	I51-2511J
	30	I51-2500L	I51-2501L	I51-2510L	I51-2511L
1200	5	I51-2600F	I51-2601F	I51-2610F	I51-2611F
	10	I51-2600H	I51-2601H	I51-2610H	I51-2611H
	15	I51-2600J	I51-2601J	I51-2610J	I51-2611J
	30	I51-2600L	I51-2601L	I51-2610L	I51-2611L
1250	5	I51-2700F	I51-2701F	I51-2710F	I51-2711F
	10	I51-2700H	I51-2701H	I51-2710H	I51-2711H
	15	I51-2700J	I51-2701J	I51-2710J	I51-2711J
	30	I51-2700L	I51-2701L	I51-2710L	I51-2711L
1500	5	I51-2800F	I51-2801F	I51-2810F	I51-2811F
	10	I51-2800H	I51-2801H	I51-2810H	I51-2811H
	15	I51-2800J	I51-2801J	I51-2810J	I51-2811J
	30	I51-2800L	I51-2801L	I51-2810L	I51-2811L
1600	5	I51-2900F	I51-2901F	I51-2910F	I51-2911F
	10	I51-2900H	I51-2901H	I51-2910H	I51-2911H
	15	I51-2900J	I51-2901J	I51-2910J	I51-2911J
	30	I51-2900L	I51-2901L	I51-2910L	I51-2911L
2000	10	I51-3000H	I51-3001H	I51-3010H	I51-3011H
	15	I51-3000J	I51-3001J	I51-3010J	I51-3011J
	30	I51-3000L	I51-3001L	I51-3010L	I51-3011L
2400	10	I51-3100H	I51-3101H	I51-3110H	I51-3111H
	15	I51-3100J	I51-3101J	I51-3110J	I51-3111J
	30	I51-3100L	I51-3101L	I51-3110L	I51-3111L
2500	10	I51-3200H	I51-3201H	I51-3210H	I51-3211H
	15	I51-3200J	I51-3201J	I51-3210J	I51-3211J
	30	I51-3200L	I51-3201L	I51-3210L	I51-3211L
3000	10	I51-3300H	I51-3301H	I51-3310H	I51-3311H
	15	I51-3300J	I51-3301J	I51-3310J	I51-3311J
	30	I51-3300L	I51-3301L	I51-3310L	I51-3311L
3200	10	I51-3400H	I51-3401H	I51-3410H	I51-3411H
	15	I51-3400J	I51-3401J	I51-3410J	I51-3411J
	30	I51-3400L	I51-3401L	I51-3410L	I51-3411L

		Art.-no.
	**Snap-on mounting**	–
	**Sealed shutter**	–

ASK 165.5

Plug-in current transformer



Selectable positions of the secondary terminals allow flexible positions of installation.

Busbar 1	190 x 60 mm
Busbar 2	3 x 160 x 10 mm
Transformer width	266 mm
Height	192 mm
Depth	100 mm

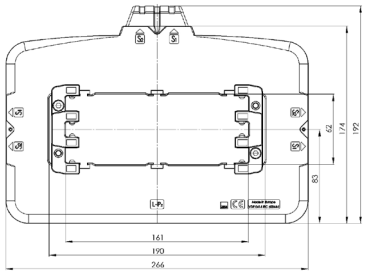

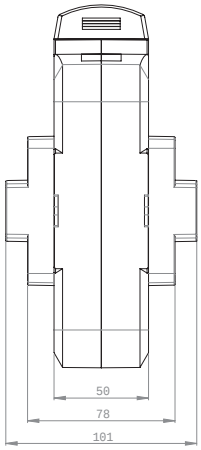

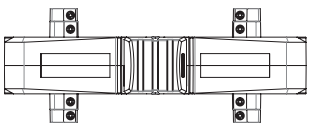

	Secondary current [A] / Class		
Primary current [A]	Burden [VA]	5 A Cl. 1 Art.-no.	5 A Cl. 0,5 Art.-no.	5 A Cl. 0,2 Art.-no.
1000	5	1650006021-x	1650005001-x	1650003001-x
	10	1650006022-x	1650005002-x	
	15	1650006001-x		
1200	5	1650006023-x	1650005003-x	1650003003-x
	10	1650006024-x	1650005004-x	1650003004-x
	15	1650006002-x	1650005022-x	
1250	5	1650006025-x	1650005023-x	1650003005-x
	10	1650006026-x	1650005030-x	1650003006-x
	15	1650006003-x	1650005024-x	
1500	10	1650006027-x	1650005005-x	1650003007-x
	15	1650006028-x	1650005006-x	
	30	1650006004-x	1650005025-x	
1600	10	1650006029-x	1650005007-x	1650003008-x
	15	1650006030-x	1650005008-x	
	30	1650006005-x	1650005026-x	
2000	10	1650006031-x	1650005009-x	1650003009-x
	15	1650006032-x	1650005010-x	1650003020-x
	30	1650006006-x	1650005011-x	
	45	1650006007-x		
2500	15	1650006033-x	1650005027-x	1650003010-x
	30	1650006034-x	1650005012-x	
	60	1650006008-x		
3000	15	1650006035-x	1650005028-x	1650003012-x
	30	1650006020-x	1650005013-x	1650003013-x
	60	1650006009-x		
4000	30	1650006036-x	1650005015-x	1650003015-x
	40	1650006037-x		
	60	1650006011-x		

		Art.-no.
	**Clamping claw**	**59090**

ASK 165.5

Plug-in current transformer



The secondary terminals of the current transformer type ASK 165.5 can be realized in 3 different positions. Please be so kind and choose with your order.
The clamping claw can be also delivered if needed. Please also state in your order.

Connection options

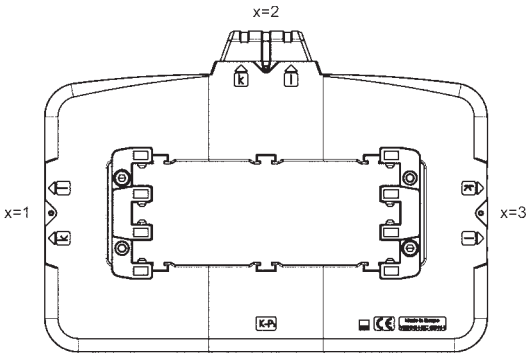

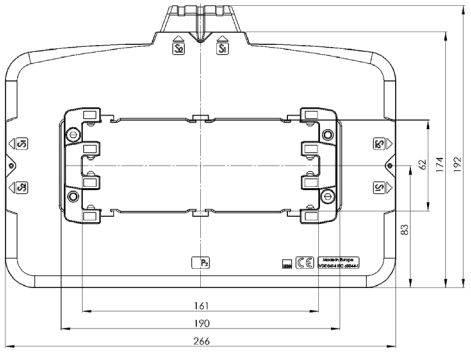

Order example

ASK 165.5 1500/5A 10VA Cl.1
Connection option „top“
Art.-no. 1650006027-2

ASK 165.5

Plug-in current transformer



Selectable positions of the secondary terminals allow flexible positions of installation.

Busbar 1	190 x 60 mm
Busbar 2	3 x 160 x 10 mm
Transformer width	266 mm
Height	192 mm
Depth	100 mm

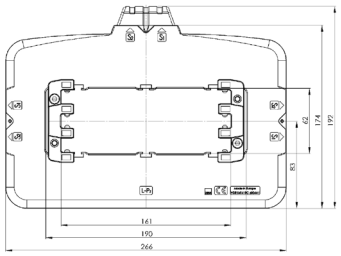

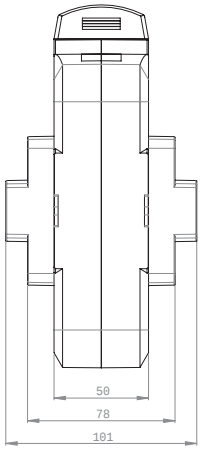

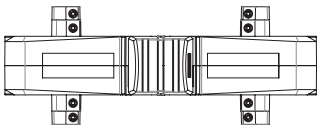

	Secondary current [A] / Class		
Primary current [A]	Burden [VA]	1 A Cl. 1 Art.-no.	1 A Cl. 0,5 Art.-no.	1 A Cl. 0,2 Art.-no.
1000	5	1650206021-x	1650205001-x	1650203001-x
	10	1650206022-x	1650205002-x	
	15	1650206001-x		
1200	5	1650206023-x	1650205004-x	1650203003-x
	10	1650206024-x	1650205005-x	1650203004-x
	15	1650206002-x	1650205024-x	
1250	5	1650206025-x	1650205025-x	1650203005-x
	10	1650206026-x	1650205006-x	1650203006-x
	15	1650206003-x	1650205026-x	
1500	10	1650206027-x	1650205007-x	1650203007-x
	15	1650206028-x	1650205008-x	
	30	1650206004-x	1650205027-x	
1600	10	1650206029-x	1650205009-x	1650203008-x
	15	1650206030-x	1650205010-x	
	30	1650206005-x	1650205028-x	
2000	10	1650206031-x	1650205011-x	1650203009-x
	15	1650206032-x	1650205012-x	1650203020-x
	30	1650206006-x	1650205013-x	
	45	1650206007-x		
2500	15	1650206033-x	1650205029-x	1650203010-x
	30	1650206034-x	1650205014-x	
	60	1650206008-x		
3000	15	1650206035-x	1650205030-x	1650203011-x
	30	1650206036-x	1650205015-x	1650203012-x
	60	1650206009-x		
4000	30	1650206037-x	1650205017-x	1650203014-x
	40	1650206038-x		
	60	1650206011-x		

		Art.-no.
	**Clamping claw**	**59090**

ASK 165.5

Plug-in current transformer



The secondary terminals of the current transformer type ASK 165.5 can be realized in 3 different positions. Please be so kind and choose with your order.
The clamping claw can be also delivered if needed. Please also state in your order.

Connection options

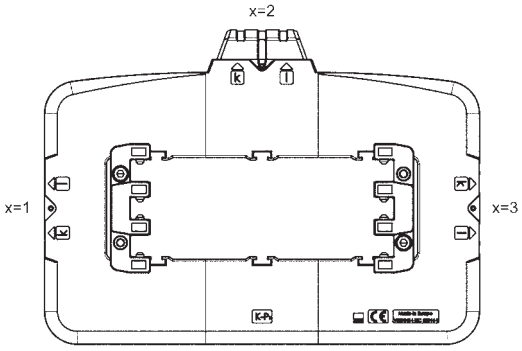

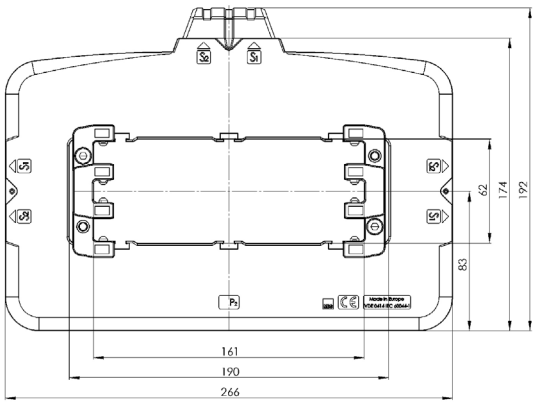

Order example

ASK 165.5 1500/5A 10VA Cl.1
Connection option „top“
Art.-no. 1650006027-2

ASK 205.5

Plug-in current transformer



Selectable positions of the secondary terminals allow flexible positions of installation.

Busbar 1	230 x 60 mm
Busbar 2	3 x 200 x 10 mm
Transformer width	306 mm
Height	192 mm
Depth	100 mm

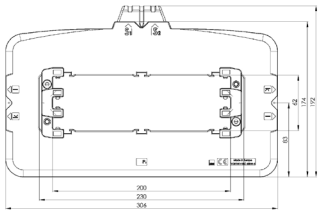

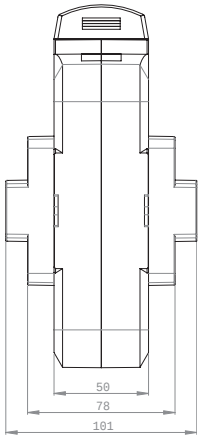

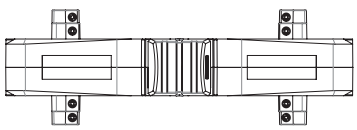

Primary current [A]	Burden [VA]	Secondary current [A] / Class 5 A Cl. 1 Art.-no.	5 A Cl. 0,5 Art.-no.	5 A Cl. 0,2 Art.-no.
1200	5	2050006023-x	2050005023-x	2050003001-x
	10	2050006024-x	2050005001-x	
	15	2050006001-x	2050005024-x	
1250	5	2050006025-x	2050005025-x	2050003003-x
	10	2050006026-x	2050005002-x	2050003004-x
	15	2050006002-x	2050005026-x	
1500	5	2050006027-x	2050005027-x	2050003005-x
	10	2050006028-x	2050005003-x	2050003006-x
	15	2050006003-x	2050005004-x	2050003007-x
	30	2050006004-x		
1600	5	2050006029-x	2050005028-x	2050003008-x
	10	2050006030-x	2050005029-x	2050003009-x
	15	2050006005-x	2050005005-x	2050003010-x
	30	2050006006-x		
2000	10	2050006031-x	2050005030-x	2050003011-x
	15	2050006032-x	2050005006-x	2050003012-x
	30	2050006007-x	2050005007-x	
2500	10	2050006033-x	2050005031-x	2050003013-x
	15	2050006034-x	2050005008-x	2050003014-x
	30	2050006035-x	2050005009-x	
3000	10	2050006036-x	2050005032-x	2050003015-x
	15	2050006037-x	2050005010-x	2050003016-x
	30	2050006038-x	2050005011-x	2050003017-x
	45	2050006009-x		
4000	15	2050006039-x	2050005033-x	2050003019-x
	30	2050006010-x	2050005012-x	2050003020-x
	60	2050006011-x		
5000	15	2050006040-x	2050005034-x	2050003021-x
	30	2050006013-x	2050005014-x	2050003022-x
	60	2050006014-x		

		Art.-no.
	**Clamping claw**	**59090**

ASK 205.5

Plug-in current transformer



The secondary terminals of the current transformer type ASK 205.5 can be realized in 3 different positions. Please be so kind and choose with your order.
The clamping claw can be also delivered if needed. Please also state in your order.

Connection options

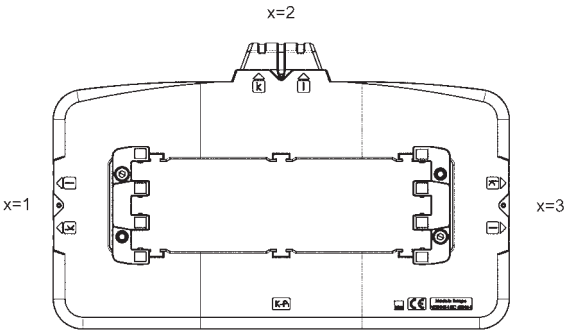

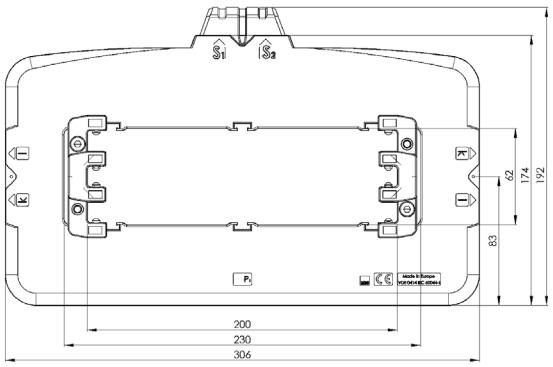

Order example

ASK 205.5 1500/5A 10VA Cl.1
Connection option „top“
Art.-no. 2050006028-2

ASK 205.5

Plug-in current transformer



Selectable positions of the secondary terminals allow flexible positions of installation.

Busbar 1	230 x 60 mm
Busbar 2	3 x 200 x 10 mm
Transformer width	306 mm
Height	192 mm
Depth	100 mm

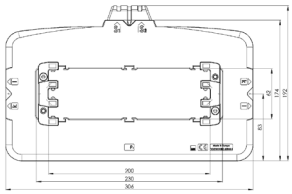

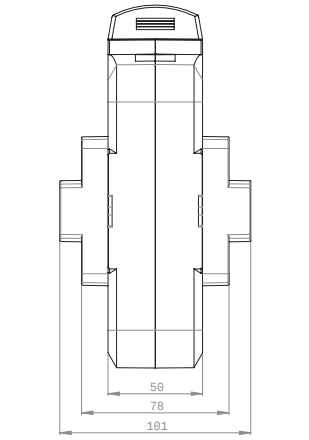

		Secondary current [A] / Class		
Primary current [A]	Burden [VA]	1 A Cl. 1 Art.-no.	1 A Cl. 0,5 Art.-no.	1 A Cl. 0,2 Art.-no.
1200	5	2050206023-x	2050205023-x	2050203001-x
	10	2050206024-x	2050205001-x	
	15	2050206001-x	2050205024-x	
1250	5	2050206025-x	2050205025-x	2050203003-x
	10	2050206026-x	2050205002-x	2050203004-x
	15	2050206002-x	2050205026-x	
1500	5	2050206027-x	2050205027-x	2050203005-x
	10	2050206028-x	2050205503-x	2050203006-x
	15	2050206003-x	2050205004-x	2050203007-x
	30	2050206004-x		
1600	10	2050206029-x	2050205028-x	2050203009-x
	15	2050206005-x	2050205005-x	2050203010-x
	30	2050206006-x		
2000	10	2050206030-x	2050205029-x	2050203011-x
	15	2050206031-x	2050205006-x	2050203012-x
	30	2050206007-x	2050205007-x	
2500	10	2050206032-x	2050205030-x	2050203013-x
	15	2050206033-x	2050205508-x	2050203014-x
	30	2050206034-x	2050205009-x	
3000	10	2050206035-x	2050205031-x	2050203015-x
	15	2050206036-x	2050205010-x	2050203016-x
	30	2050206037-x	2050205011-x	2050203017-x
	45	2050206009-x		
4000	15	2050206038-x	2050205032-x	2050203019-x
	30	2050206010-x	2050205012-x	2050203020-x
	60	2050206011-x		
5000	15	2050206039-x	2050205033-x	2050203021-x
	30	2050206013-x	2050205014-x	2050203022-x
	60	2050206014-x		

		Art.-no.
	**Clamping claw**	**59090**

ASK 205.5

Plug-in current transformer



The secondary terminals of the current transformer type ASK 205.5 can be realized in 3 different positions. Please be so kind and choose with your order.
The clamping claw can be also delivered if needed. Please also state in your order.

Connection options

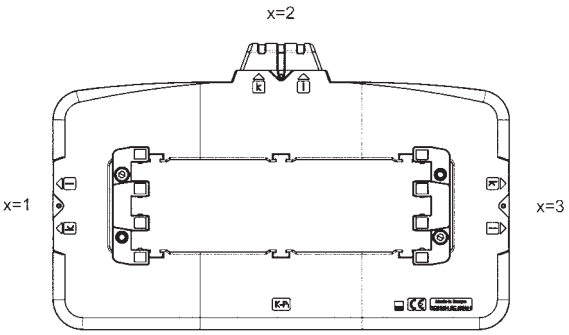

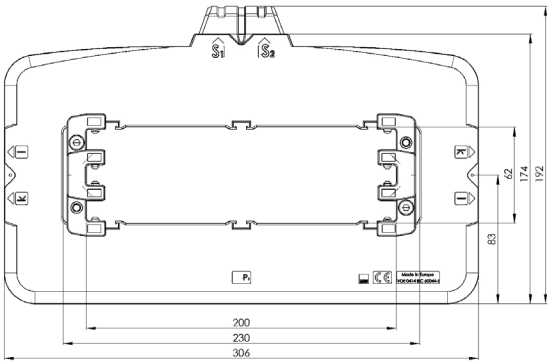

Order example

ASK 205.5 1500/5A 10VA Cl.1
Connection option „top“
Art.-no. 2050006028-2

Low-voltage current transformers for industrial applications with screwless connection technology

Plug-in current transformer with „Cage Clamp®“, UL certificated



Low-voltage current transformers for industrial applications with screwless connection technology

Plug-in current transformer with „Cage Clamp®“, UL certificated

CTB 31.35	Busbar 1: 30 x 10 mm Busbar 2: 25 x 12 mm Round conductor: 25,7 mm Transformer width: 60 mm	Current range: 50 ... 750 A	Page: 110
CTB 41.35	Busbar 1: 40 x 10 mm Busbar 2: 30 x 15 mm Round conductor: 31,8 mm Transformer width: 70 mm	Current range: 75 ... 1000 A	Page: 111
CTB 51.35	Busbar 1: 50 x 12 mm Busbar 2: 40 x 30 mm Round conductor: 43,7 mm Transformer width: 85 mm	Current range: 100 ... 1250 A	Page: 112
CTB 61.35	Busbar 1: 63 x 10 mm Busbar 2: 50 x 30 mm Round conductor: 43,7 mm Transformer width: 95 mm	Current range: 200 ... 1600 A	Page: 113
CTB 81.35	Busbar 1: 80 x 10 mm Busbar 2: 60 x 30 mm Round conductor: 54,7 mm Transformer width: 120 mm	Current range: 400 ... 2000 A	Page: 114
CTB 101.35	Busbar 1: 100 x 10 mm Busbar 2: 80 x 30 mm Round conductor: 70 mm Transformer width: 130 mm	Current range: 400 ... 2500 A	Page: 115

CTB 31.35

Plug-in current transformer



Busbar 1	30 x 10 mm
Busbar 2	25 x 12 mm
Busbar 3	20 x 20 mm
Round conductor	25,7 mm
Transformer width	60 mm
Height	80,9 mm
Depth	52 mm

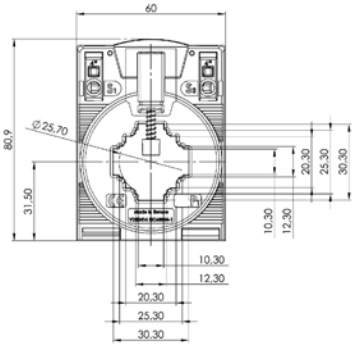

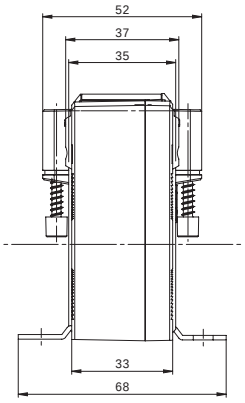

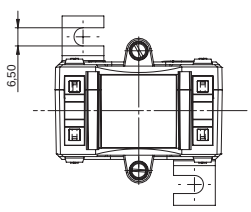

	Secondary current [A] / Class					
Primary current [A]	Burden [VA]	5 A Cl. 3 Art.-no.	5 A Cl. 1 Art.-no.	5 A Cl. 0,5 Art.-no.	1 A Cl. 3 Art.-no.	1 A Cl. 1 Art.-no.	1 A Cl. 0,5 Art.-no.
50	1,25	50-0001			50-0021		
60	1,25		50-0017			50-0037	
75	2,5		50-0018			50-0038	
80	2,5		50-0019			50-0039	
100	2,5		50-0002			50-0022	
125	1,5			50-2001			50-2021
	2,5		50-0003			50-0023	
150	2,5			50-2002			50-2022
	5		50-0004			50-0024	
200	2,5			50-2003			50-2023
	5		50-0005			50-0025	
250	5		50-0006	50-2004		50-0026	50-2024
300	5		50-0007	50-2005		50-0027	50-2025
	10		50-0008			50-0028	
400	5		50-0009	50-2006		50-0029	50-2026
	10		50-0010	50-2007		50-0030	50-2027
500	5		50-0011	50-2008		50-0031	50-2028
	10		50-0012	50-2009		50-0032	50-2029
600	5		50-0013	50-2010		50-0033	50-2030
	10		50-0014	50-2011		50-0034	50-2031
750	5		50-0015	50-2012		50-0035	50-2032
	10		50-0016	50-2013		50-0036	50-2033

		Art.-no.
	**Snap-on mounting CTB**	**55015**
	**Quick-Fix**	**55021**
	**Sealed shutter, type G**	**59057**

- UL certification; Certificate no.: 20100426-E336996
- World's first CT with screwless connection technology – „Cage Clamp®"
- Innovative time-saving connection of either solid or flexible secondary conductor not exceeding 4 mm^2 to be fitted either on the top or in front without ferrules
- Vibration and shock resistant
- Maintenance free gas-tight connection
- High current carrying capacity
- Therm. nominal continuous rated current I_{cth}: 1.2 x I_{pr}
- Low-voltage CT for maximum operating voltage of 1.2 kV; use in 690 V networks possible
- Higher isolation level 1.2/6/12 kV - Tested lightning impulse voltage for 690 V switch-gear according IEC 61439-1 and -2.

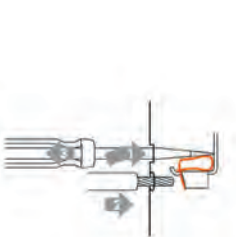

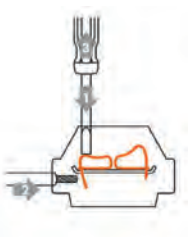





CTB 41.35

Plug-in current transformer



Busbar 1	40 x 10 mm
Busbar 2	30 x 15 mm
Round conductor	31,8 mm
Transformer width	70 mm
Height	91,15 mm
Depth	52 mm

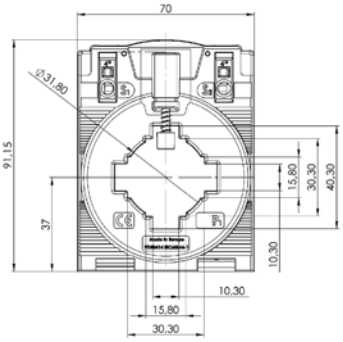

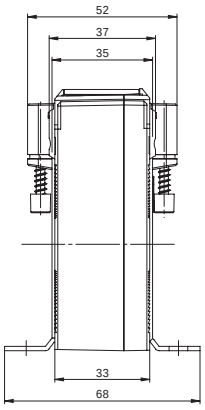

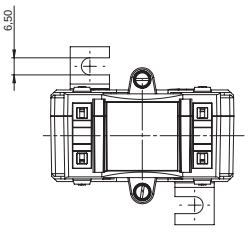

	Secondary current [A] / Class					
Primary current [A]	Burden [VA]	5 A Cl. 3 Art.-no.	5 A Cl. 1 Art.-no.	5 A Cl. 0,5 Art.-no.	1 A Cl. 3 Art.-no.	1 A Cl. 1 Art.-no.	1 A Cl. 0,5 Art.-no.
75	1,25	50-0050			50-0070		
80	1,25	50-0051			50-0071		
100	2,5	50-0052			50-0072		
125	2,5		50-0053			50-0073	
150	2,5		50-0054			50-0074	
200	1,5			50-2050			50-2070
	5		50-0055			50-0075	
250	2,5			50-2051			50-2071
	5		50-0056			50-0076	
300	2,5			50-2052			
	5		50-0057			50-0077	50-2072
400	5		50-0058	50-2053		50-0078	50-2073
500	5		50-0059	50-2054		50-0079	50-2074
	10		50-0060			50-0080	50-2075
600	5		50-0061	50-2055		50-0081	50-2076
	10		50-0062	50-2056		50-0082	50-2077
750	5		50-0063	50-2057		50-0083	50-2078
	10		50-0064	50-2058		50-0084	
800	5		50-0065	50-2059		50-0085	50-2079
	10		50-0066	50-2060		50-0086	50-2080
1000	5		50-0067	50-2061		50-0087	50-2081
	10		50-0068	50-2062		50-0088	50-2082

		Art.-no.
	**Snap-on mounting CTB**	**55015**
	**Quick-Fix**	**55021**
	**Sealed shutter, type G**	**59057**

- UL certification; Certificate no.: 20100426-E336996
- World's first CT with screwless connection technology – „Cage Clamp®"
- Innovative time-saving connection of either solid or flexible secondary conductor not exceeding 4 mm² to be fitted either on the top or in front without ferrules
- Vibration and shock resistant
- Maintenance free gas-tight connection
- High current carrying capacity
- Therm. nominal continuous rated current I_{cth}: 1.2 x I_{pr}
- Low-voltage CT for maximum operating voltage of 1.2 kV; use in 690 V networks possible
- Higher isolation level 1.2/6/12 kV - Tested lightning impulse voltage for 690 V switch-gear according IEC 61439-1 and -2.

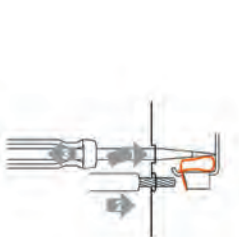

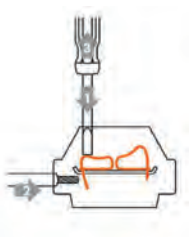



CTB 51.35

Plug-in current transformer



Busbar 1	50 x 12 mm
Busbar 2	40 x 30 mm
Round conductor	43,7 mm
Transformer width	85 mm
Height	105,25 mm
Depth	52 mm

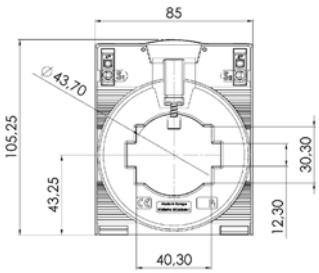

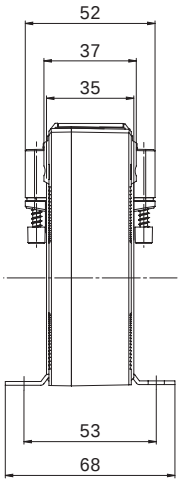

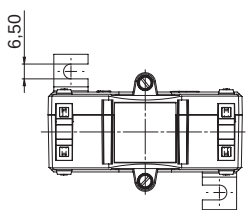

Primary current [A]	Burden [VA]	Secondary current [A] / Class: 5 A Cl. 1 Art.-no.	5 A Cl. 0,5 Art.-no.	1 A Cl. 1 Art.-no.	1 A Cl. 0,5 Art.-no.
100	1,25	50-0100		50-0120	
125	2,5	50-0101		50-0121	
150	2,5	50-0102		50-0122	
200	1,5		50-2100		50-2120
	5	50-0103		50-0123	
250	2,5		50-2101		50-2121
	5	50-0104		50-0124	
300	2,5		50-2102		50-2122
	5	50-0105		50-0125	
400	5	50-0106	50-2103	50-0126	50-2123
	10	50-0107		50-0127	
500	5	50-0108	50-2104	50-0128	50-2124
	10	50-0109	50-2105	50-0129	50-2125
600	5	50-0110	50-2106	50-0130	50-2126
	10	50-0111	50-2107	50-0131	50-2127
750	5	50-0112	50-2108	50-0132	50-2128
	10	50-0113	50-2109	50-0133	50-2129
800	5	50-0114	50-2110	50-0134	50-2130
	10	50-0115	50-2111	50-0135	50-2131
1000	5	50-0116	50-2112	50-0136	50-2132
	10	50-0117	50-2113	50-0137	50-2133
1200	5	50-0291	50-2114	50-0293	50-2134
	10	50-0292	50-2115	50-0294	50-2140
1250	5	50-0118	50-2116	50-0138	50-2136
	10	50-0119	50-2117	50-0139	50-2137

		Art.-no.
	**Quick-Fix**	**55021**
	**Sealed shutter, type H**	**59058**

- UL certification; Certificate no.: 20100426-E336996
- World's first CT with screwless connection technology – „Cage Clamp®"
- Innovative time-saving connection of either solid or flexible secondary conductor not exceeding 4 mm² to be fitted either on the top or in front without ferrules
- Vibration and shock resistant
- Maintenance free gas-tight connection
- High current carrying capacity
- Therm. nominal continuous rated current I_{cth}: 1.2 x I_{pr}
- Low-voltage CT for maximum operating voltage of 1.2 kV; use in 690 V networks possible
- Higher isolation level 1.2/6/12 kV - Tested lightning impulse voltage for 690 V switchgear according IEC 61439-1 and -2.

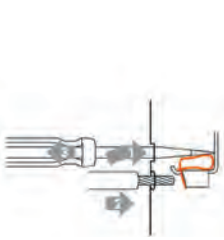

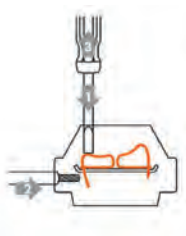





CTB 61.35

Plug-in current transformer



Busbar 1	63 x 10 mm
Busbar 2	50 x 30 mm
Round conductor	43,7 mm
Transformer width	95 mm
Height	114,86 mm
Depth	52 mm

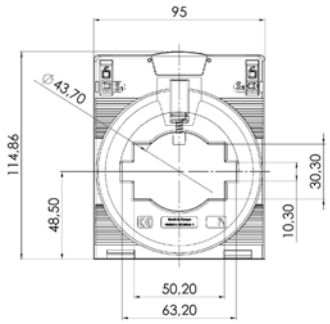

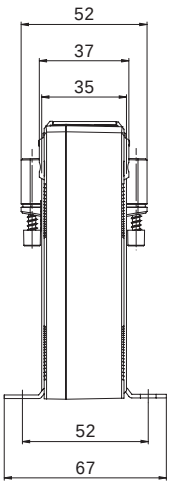

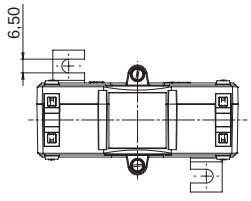

	Secondary current [A] / Class			
Primary current [A] / Burden [VA]	5 A Cl. 1 Art.-no.	5 A Cl. 0,5 Art.-no.	1 A Cl. 1 Art.-no.	1 A Cl. 0,5 Art.-no.
200 / 2,5	50-0150	50-2150	50-0170	50-2170
250 / 2,5		50-2151		50-2171
250 / 5	50-0151		50-0171	
300 / 5	50-0152	50-2152	50-0172	50-2172
400 / 5	50-0153	50-2153	50-0173	50-2173
500 / 5	50-0154	50-2154	50-0174	50-2174
600 / 5	50-0155	50-2155	50-0175	50-2175
750 / 5	50-0156	50-2156	50-0176	50-2176
750 / 10	50-0157	50-2157	50-0177	50-2177
800 / 5	50-0158	50-2158	50-0178	50-2178
800 / 10	50-0159	50-2159	50-0179	50-2179
1000 / 5	50-0160	50-2160	50-0180	50-2180
1000 / 10	50-0161	50-2161	50-0181	50-2181
1200 / 5	50-0287	50-2162	50-0289	50-2182
1200 / 10	50-0288	50-2163	50-0290	50-2183
1250 / 5	50-0162	50-2164	50-0182	50-2184
1250 / 10	50-0163	50-2165	50-0183	50-2185
1500 / 5	50-0164	50-2166	50-0184	50-2186
1500 / 10	50-0165	50-2167	50-0185	50-2187
1600 / 5	50-0166	50-2168	50-0186	50-2188
1600 / 10	50-0167	50-2169	50-0187	50-2189

		Art.-no.
	**Quick-Fix**	**55021**
	**Sealed shutter, type J**	**59059**

- UL certification; Certificate no.: 20100426-E336996
- World's first CT with screwless connection technology – „Cage Clamp®"
- Innovative time-saving connection of either solid or flexible secondary conductor not exceeding 4 mm² to be fitted either on the top or in front without ferrules
- Vibration and shock resistant
- Maintenance free gas-tight connection
- High current carrying capacity
- Therm. nominal continuous rated current I_{cth}: 1.2 x I_{pr}
- Low-voltage CT for maximum operating voltage of 1.2 kV; use in 690 V networks possible
- Higher isolation level 1.2/6/12 kV - Tested lightning impulse voltage for 690 V switch-gear according IEC 61439-1 and -2.

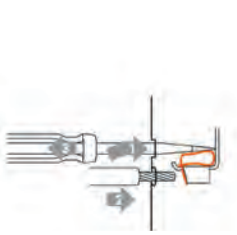



CTB 81.35

Plug-in current transformer



Busbar 1	80 x 10 mm
Busbar 2	60 x 30 mm
Round conductor	54,7 mm
Transformer width	120 mm
Height	134,66 mm
Depth	52 mm

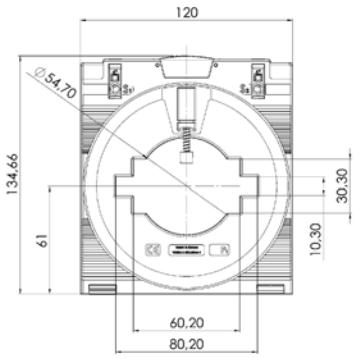

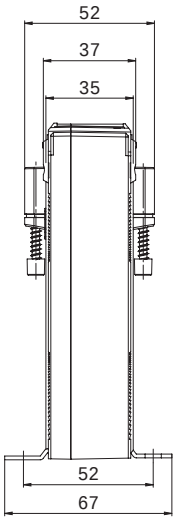

	Secondary current [A] / Class			
Primary current [A]	Burden [VA]	5 A Cl. 1 Art.-no.	5 A Cl. 0,5 Art.-no.	1 A Cl. 1 Art.-no.	1 A Cl. 0,5 Art.-no.
400	2,5		50-2190		50-2210
	5	50-0190		50-0210	
500	2,5		50-2191		
	5	50-0191		50-0211	50-2211
600	5	50-0192	50-2192	50-0212	50-2212
750	5	50-0193	50-2193	50-0213	50-2213
	10	50-0194	50-2194	50-0214	50-2214
800	5	50-0195	50-2195	50-0215	50-2215
	10	50-0196	50-2196	50-0216	50-2216
1000	5	50-0197	50-2197	50-0217	50-2217
	10	50-0198	50-2198	50-0218	50-2218
1200	5	50-0283	50-2199	50-0285	50-2219
	10	50-0284	50-2200	50-0286	50-2220
1250	5	50-0199	50-2201	50-0219	50-2221
	10	50-0200	50-2202	50-0220	50-2222
1500	5	50-0201	50-2203	50-0221	50-2223
	10	50-0202	50-2204	50-0222	50-2224
1600	5	50-0203	50-2205	50-0223	50-2225
	10	50-0204	50-2206	50-0224	50-2226
2000	10	50-0205	50-2207	50-0225	50-2227
	15	50-0206	50-2208	50-0226	50-2228

		Art.-no.
	**Quick-Fix**	**55021**
	**Sealed shutter, type J**	**59059**

- UL certification; Certificate no.: 20100426-E336996
- World's first CT with screwless connection technology – „Cage Clamp®"
- Innovative time-saving connection of either solid or flexible secondary conductor not exceeding 4 mm² to be fitted either on the top or in front without ferrules
- Vibration and shock resistant
- Maintenance free gas-tight connection
- High current carrying capacity
- Therm. nominal continuous rated current I_{cth}: 1.2 x I_{pr}
- Low-voltage CT for maximum operating voltage of 1.2 kV; use in 690 V networks possible
- Higher isolation level 1.2/6/12 kV - Tested lightning impulse voltage for 690 V switchgear according IEC 61439-1 and -2.

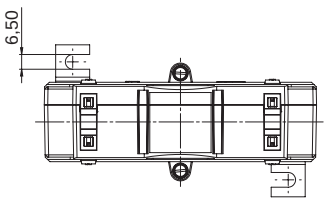

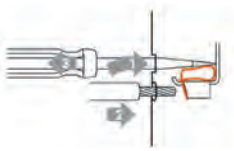

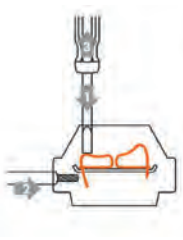





CTB 101.35

Plug-in current transformer

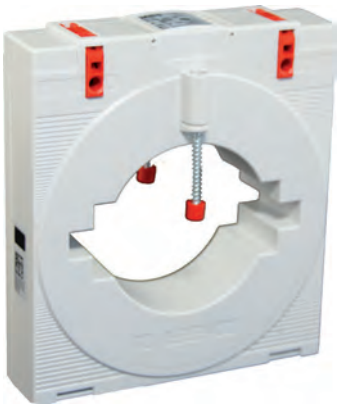

Busbar 1	100 x 10 mm
Busbar 2	80 x 30 mm
Round conductor	70 mm
Transformer width	130 mm
Height	147,49 mm
Depth	52 mm

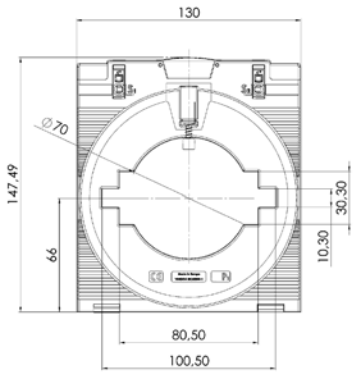

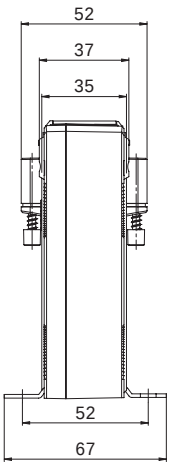

	Secondary current [A] / Class			
Primary current [A]	Burden [VA]	5 A Cl. 1 Art.-no.	5 A Cl. 0,5 Art.-no.	1 A Cl. 1 Art.-no.	1 A Cl. 0,5 Art.-no.
400	2,5		50-2230		50-2260
	5	50-0230		50-0260	
500	5	50-0231	50-2231	50-0261	50-2261
600	5		50-2232		50-2262
	10	50-0232		50-0262	
750	5	50-0233	50-2233	50-0263	50-2263
	10	50-0234	50-2234	50-0264	50-2264
800	5	50-0235	50-2235	50-0265	50-2265
	10	50-0236	50-2236	50-0266	50-2266
1000	5	50-0237	50-2237	50-0267	50-2267
	10	50-0238	50-2238	50-0268	50-2268
1200	5	50-0279	50-2239	50-0281	50-2269
	10	50-0280	50-2240	50-0282	50-2270
1250	5	50-0239	50-2241	50-0269	50-2271
	10	50-0240	50-2242	50-0270	50-2272
1500	10	50-0241	50-2243	50-0271	50-2273
	15	50-0242	50-2244	50-0272	50-2274
1600	10	50-0243	50-2245	50-0273	50-2275
	15	50-0244	50-2246	50-0274	50-2276
2000	10	50-0245	50-2247	50-0275	50-2277
	15	50-0246	50-2248	50-0276	50-2278
2500	10	50-0247	50-2249	50-0277	50-2279
	15	50-0248	50-2250	50-0278	50-2280

		Art.-no.
	**Quick-Fix**	**55021**
	**Sealed shutter, type J**	**59059**

- UL certification; Certificate no.: 20100426-E336996
- World's first CT with screwless connection technology – „Cage Clamp®"
- Innovative time-saving connection of either solid or flexible secondary conductor not exceeding 4 mm² to be fitted either on the top or in front without ferrules
- Vibration and shock resistant
- Maintenance free gas-tight connection
- High current carrying capacity
- Therm. nominal continuous rated current I_{cth}: 1.2 x I_{pr}
- Low-voltage CT for maximum operating voltage of 1.2 kV; use in 690 V networks possible
- Higher isolation level 1.2/6/12 kV - Tested lightning impulse voltage for 690 V switchgear according IEC 61439-1 and -2.

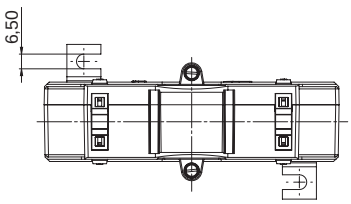

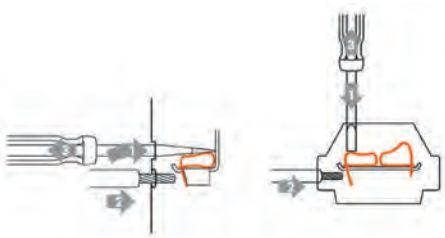



Low-voltage current transformers for industrial applications

Wound current transformer

WSK 30	Transformer width:	61 mm	Current range: 1 ... 20 A	Page: 118
WSK 40	Transformer width:	71 mm	Current range: 1 ... 30 A	Page: 119
WSK 40N	Transformer width:	71 mm	Current range: 30 ... 50 A	Page: 120
WSK 60	Transformer width:	71 mm	Current range: 5 ... 30 A	Page: 121
WSK 70.6	Transformer width:	84,5 mm	Current range: 25 ... 100 A	Page: 122
WSK 70.6N	Transformer width:	136 mm	Current range: 25 ... 100 A	Page: 123
WSK 31.5	Transformer width:	115 mm	Current range: 25 ... 150 A	Page: 124

Wound current transformers

Based on the physical operating principle of current transformers, the required core volume transferring an amount of power, increases rapidly with the decreasing of nominal current. As there are limits on increasing the transformer size, wound current transformers are being used.

Interim current transformers also belong to the group of wound current transformers. This construction is mainly used for primary currents of up to 10 A, and achieves a transformation at a higher or lower secondary current values. In addition to their application in adapting a measuring circuit on existing measuring units, interim current transformers are being used also for lowering the power loss by the transmission of analogically measured values over great distances. This is made possible by means of a squared dependence of the power loss from the flowing current.

$$P_V\,[W] = I_S^2 \times R_L$$

Specified therein:
- P_v Power loss in Watt
- I_s Secondary nominal current of the current transformer in ampere
- R_L Lead resistance of the secondary connection cables in Ohm (Important: Lead resistance of the flow- and return conductor!)

This means when the original nominal current is halved, the conductor loss drops down to 25 % of its original value.

Indication: The selection of the nominal power of the initially activated main transformer is achieved through the application of the following measurement comparisions.

$$P_{GH}\,[VA] = P_Z \times \left(\frac{I_2}{I_1}\right)^2 + P_E + P_E$$

Legende:
- P_{GH} Apparent power of the main transformer
- P_Z Secondary performance of the interim transformer (nominal performance inclusive of conductor losses)
- P_E Consumption of the interim transformer by nominal current (typical: approx. 3 VA)
- P_{HZ} Conductor losses between main- and interim transformer by nominal current
- I_1 Primary nominal current of the interim transformer
- I_2 Secondary nominal current of the interim transformer

WSK 30

Wound current transformer



Transformer width	61 mm
Height	75,5 mm
Depth	35 mm

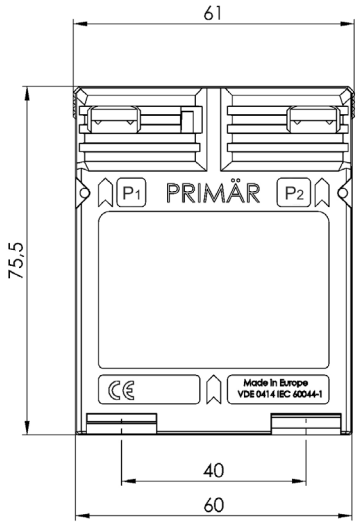

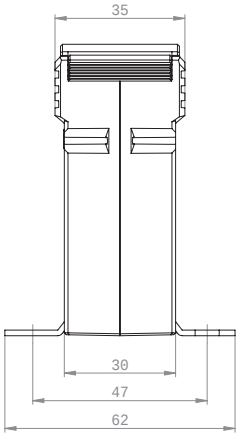

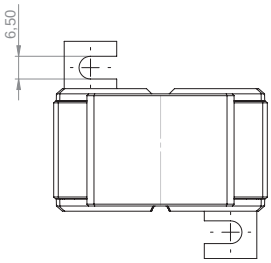

	Secondary current [A] / Class			
Primary current [A]	Burden [VA]	5 A Cl. 1 Art.-no.	5 A Cl. 0,5 Art.-no.	1 A Cl. 1 Art.-no.	1 A Cl. 0,5 Art.-no.
1	2,5	30017	30011	30217	30211
	5	30018		30218	
2,5	2,5	30019	30012	30219	30212
	5	30020		30220	
5	2,5	30021	30013	30221	30213
	5	30022		30222	
10	2,5	30023	30014	30223	30214
	5	30024		30224	
15	2,5	30025	30015	30225	30215
	5	30026		30226	
20	2,5	30027	30016	30227	30216
	5	30028		30228	

		Art.-no.
	**Snap-on mounting, type A**	**53011**
	**Sealed shutter, type A**	**59040**

Cross section of primary side: max 4 mm² with ferrule, 6 mm² solid

WSK 40

Wound current transformer



Transformer width	71 mm
Height	85,5 mm
Depth	45 mm

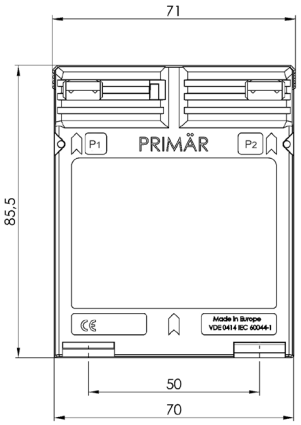

		Secondary current [A] / Class			
Primary current [A]	Burden [VA]	5 A Cl. 1 Art.-no.	5 A Cl. 0,5 Art.-no.	1 A Cl. 1 Art.-no.	1 A Cl. 0,5 Art.-no.
1	2,5	31044	31011	31244	31211
	5	31045	31012	31245	31212
	10	31046	31013	31246	31213
2,5	2,5	31048	31015	31248	31215
	5	31049	31016	31249	31216
	10	31050	31017	31250	31217
5	2,5	31052	31019	31252	31219
	5	31053	31020	31253	31220
	10	31054	31021	31254	31221
10	2,5	31056	31023	31256	31223
	5	31057	31024	31257	31224
	10	31058	31025	31258	31225
15	2,5	31060	31027	31260	31227
	5	31061	31028	31261	31228
	10	31062	31029	31262	31229
20	2,5	31064	31031	31264	31231
	5	31065	31032	31265	31232
	10	31066	31033	31266	31233
25	2,5	31068	31035	31268	31235
	5	31069	31036	31269	31236
	10	31070	31037	31270	31237
30	2,5	31072	31039	31272	31239
	5	31073	31040	31273	31240
	10	31074	31041	31274	31241

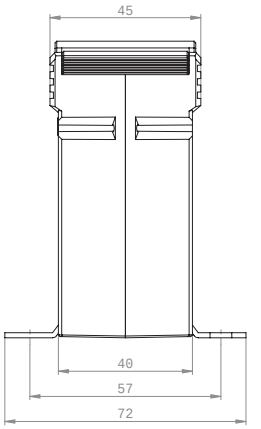

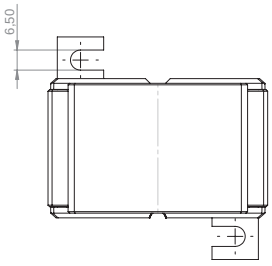

		Art.-no.
	**Snap-on mounting, type D**	**55012**
	**Sealed shutter, type B**	**59041**

Cross section of primary side: max 4 mm² with ferrule, 6 mm² solid, max. 8 mm² with cable lugs

WSK 40N

Wound current transformer



Transformer width	71 mm
Height	107 mm
Depth	55 mm

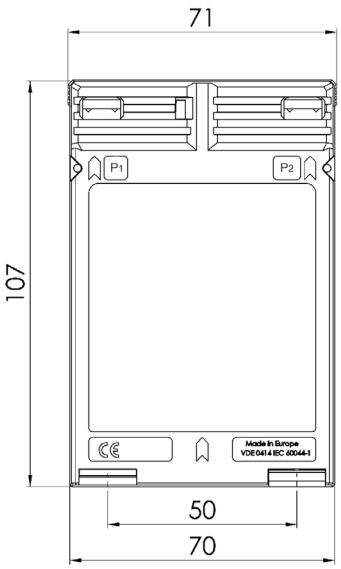

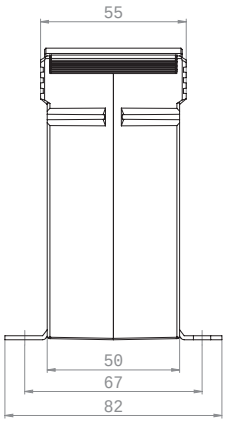

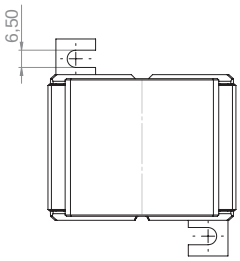

	Secondary current [A] / Class			
Primary current [A]	Burden [VA]	5 A Cl. 1 Art.-no.	5 A Cl. 0,5 Art.-no.	1 A Cl. 1 Art.-no.	1 A Cl. 0,5 Art.-no.
30	2,5	31161	31151	31361	31351
	5	31162	31152	31362	31352
	10	31163	31153	31363	31353
40	2,5	31164	31154	31364	31354
	5	31165	31155	31365	31355
	10	31166	31156	31366	31356
50	2,5	31167	31157	31367	31357
	5	31168	31158	31368	31358
	10	31169	31159	31369	31359

		Art.-no.
	**Snap-on mounting, type C**	**55011**
	**Sealed shutter, type B**	**59041**

Cross section of primary side: max 10 mm² with cable lugs

WSK 60

Wound current transformer



Transformer width	71 mm
Height	88,5 mm
Depth	60 mm

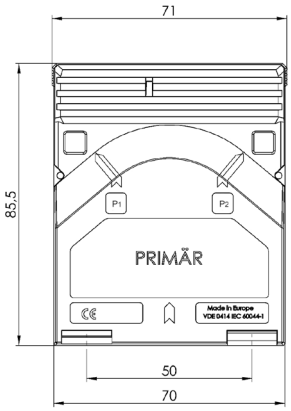

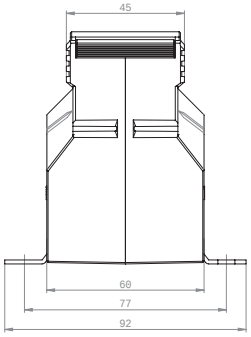

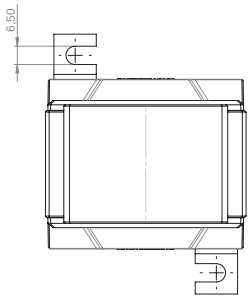

	Secondary current [A] / Class			
Primary current [A]	Burden [VA]	5 A Cl. 1 Art.-no.	5 A Cl. 0,5 Art.-no.	1 A Cl. 1 Art.-no.	1 A Cl. 0,5 Art.-no.
5	2,5	35041	35011	35241	35211
	5	35042	35012	35242	35212
	10	35043	35013	35243	35213
	15	35044		35244	
10	2,5	35045	35014	35245	35214
	5	35046	35015	35246	35215
	10	35047	35016	35247	35216
	15	35048		35248	
15	2,5	35049	35017	35249	35217
	5	35050	35018	35250	35218
	10	35051	35019	35251	35219
	15	35052		35252	
20	2,5	35053	35020	35253	35220
	5	35054	35021	35254	35221
	10	35055	35022	35255	35222
	15	35056		35256	
25	2,5	35057	35023	35257	35223
	5	35058	35024	35258	35224
	10	35059	35025	35259	35225
	15	35060		35260	
30	2,5	35061	35026	35261	35226
	5	35062	35027	35262	35227
	10	35063	35028	35263	35228
	15	35064		35264	

		Art.-no.
	**Snap-on mounting**	**–**
	**Sealed shutter, type B**	**59041**

Cross section of primary side: max 4 mm² with ferrule, 6 mm² solid, max. 8 mm² with cable lugs



WSK 70.6

Wound current transformer

Transformer width	84,5 mm
Height	95,5 mm
Depth	60 mm

Sealed shutter: optional

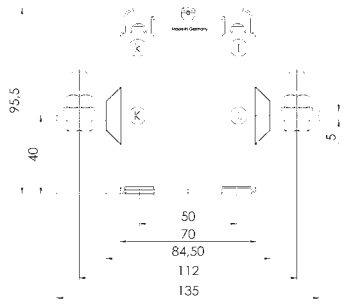

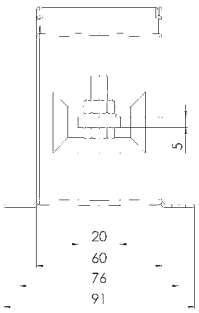

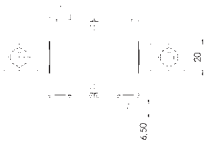

	Secondary current [A] / Class			
Primary current [A]	Burden [VA]	5 A Cl. 1 Art.-no.	5 A Cl. 0,5 Art.-no.	1 A Cl. 1 Art.-no.	1 A Cl. 0,5 Art.-no.
25	2,5	32038			
	5	32039	32012	32239	32212
	10	32040	32013	32240	32213
	15	32041		32241	
30	2,5	32042	32014	32242	32214
	5	32043	32015	32243	32215
	10	32044	32016	32244	32216
	15	32045		32245	
40	2,5	32046	32017	32246	32217
	5	32047	32018	32247	32218
	10	32048	32019	32248	32219
	15	32049		32249	
50	2,5	32050	32020	32250	32220
	5	32051	32021	32251	32221
	10	32052	32022	32252	32222
	15	32053		32253	
60	2,5	32054	32023	32254	32223
	5	32055	32024	32255	32224
	10	32056	32025	32256	32225
	15	32057		32257	
75	2,5	32058	32026	32258	32226
	5	32059	32027	32259	32227
	10	32060	32028	32260	32228
	15	32061		32261	
80	2,5	32062	32029	32262	32229
	5	32063	32030	32263	32230
	10	32064	32031	32264	32231
	15	32065		32265	
100	2,5	32066	32032	32266	32232
	5		32033	32267	32233
	10	32068vc	32034	32268	32234
	15	32069		32269	

		Art.-no.
	**Snap-on mounting**	**–**
	**Sealed shutter**	**59043**

WSK 70.6 N

Wound current transformer



Transformer width	60 mm
Height	85,5 mm
Depth	136 mm

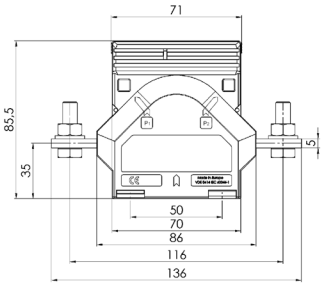

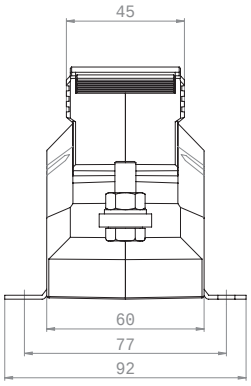

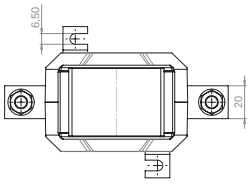

	Secondary current [A] / Class			
Primary current [A]	Burden [VA]	5 A Cl. 1 Art.-no.	5 A Cl. 0,5 Art.-no.	1 A Cl. 1 Art.-no.	1 A Cl. 0,5 Art.-no.
25	2,5	89047	89011	89247	89211
	5	89048	89012	89248	89212
	10	89049	89013	89249	89213
	15			89250	
30	2,5	89051	89015	89251	89215
	5	89052	89016	89252	89216
	10	89053	89017	89253	89217
	15	89054		89254	
40	2,5	89055	89019	89255	89219
	5	89056	89020	89256	89220
	10	89057	89021	89257	89221
	15	89058		89258	
50	2,5	89059	89023	89259	89223
	5	89060	89024	89260	89224
	10	89061	89025	89261	89225
	15	89062		89262	
60	2,5	89063	89027	89263	89227
	5	89064	89028	89264	89228
	10	89065	89029	89265	89229
	15	89066		89266	
75	2,5	89067	89031	89267	89231
	5	89068	89032	89268	89232
	10	89069	89033	89269	89233
	15	89070		89270	
80	2,5	89071	89035	89271	89235
	5	89072	89036	89272	89236
	10	89073	89037	89273	89237
	15	89074		89274	
100	2,5	89075	89039	89275	89239
	5	89076	89040	89276	89240
	10	89077	89041	89277	89241
	15	89078		89278	

		Art.-no.
	**Snap-on mounting**	**–**
	**Sealed shutter, type B**	**59041**

Current transformer with primary conductor 20 x 5 mm, screw M8

WSK 31.5

Wound current transformer



Transformer width	70 mm
Height	100 mm
Depth	115 mm

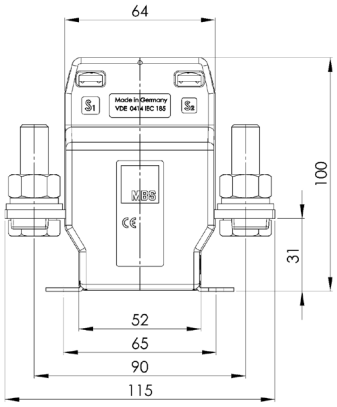

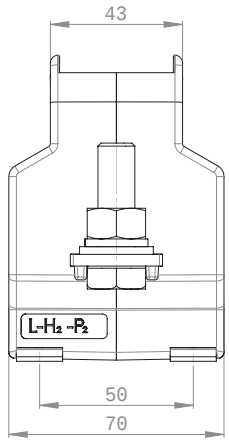

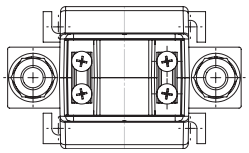

	Secondary current [A] / Class			
Primary current [A]	Burden [VA]	5 A Cl. 1 Art.-no.	5 A Cl. 0,5 Art.-no.	1 A Cl. 1 Art.-no.	1 A Cl. 0,5 Art.-no.
25	2,5	33047	33011	33247	33211
	5	33048	33012	33248	33212
	10	33049	33013	33249	33213
	15	33050		33250	
30	2,5	33051	33015	33251	33215
	5	33052	33016	33252	33216
	10	33053	33017	33253	33217
40	2,5	33055	33019	33255	33219
	5	33056	33020	33256	33220
	10	33057	33021	33257	33221
	15	33058		33258	
50	2,5	33059	33023	33259	33223
	5	33060	33024	33260	33224
	10	33061	33025	33261	33225
	15	33062	33026	33262	33226
60	2,5	33063	33027	33263	33227
	5	33064	33028	33264	33228
	10	33065	33029	33265	33229
	15	33066	33030	33266	33230
75	2,5	33067	33031	33267	33231
	5	33068	33032	33268	33232
	10	33069	33033	33269	33233
	15	33070	33034	33270	33234
80	2,5	33071	33035	33271	33235
	5	33072	33036	33272	33236
	10	33073	33037	33273	33237
	15	33074	33038	33274	33238
100	2,5	33075	33039	33275	33239
	5	33076	33040	33276	33240
	10	33077	33041	33277	33241
	15	33078	33042	33278	33242
150	2,5	33079	33043	33279	33243
	5	33080	33044	33280	33244
	10	33081	33045	33281	33245
	15	33082	33046	33282	33246

		Art.-no.
	**Snap-on mounting**	**–**
	**Sealed shutter, type F**	**59045**

Current transformer with primary conductor 30 x 5 mm, screw M12, tork 32Nm

Low-voltage current transformers for industrial applications

Split-core current transformer for isolated primary conductors

KBR 18S Round conductor: 18,5 mm Current range: 60 ... 250 A Page: 126
Transformer width: 36 mm

KBR 18 Round conductor: 18,5 mm Current range: 50 ... 250 A Page: 127
Transformer width: 41,6 mm

KBR 18L Round conductor: 18,4 mm Current range: 100 ... 250 A Page: 128
Transformer width: 49 mm

KBR 28 Round conductor: 27,9 mm Current range: 200 ... 500 A Page: 129
Transformer width: 49 mm

KBR 32 Round conductor: 32,5 mm Current range: 100 ... 600 A Page: 130
Transformer width: 59,2 mm

KBR 42 Round conductor: 42,4 mm Current range: 250 ... 1000 A Page: 131
Transformer width: 67 mm

KBR 42L Round conductor: 2x 42,4 mm Current range: 250 ... 1000 A Page: 132
Transformer width: 67 mm

KBR 44 Round conductor: 44 mm Current range: 250 ... 1000 A Page: 133
Transformer width: 72,2 mm

KBR 18S

Split-core current transformer



Round conductor	18,5 mm
Transformer width	36,0 mm
Height	62,4 mm
Depth	50 mm

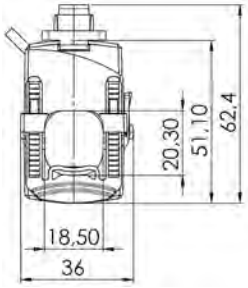

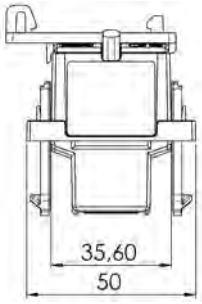

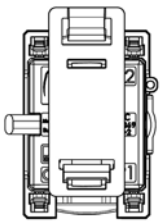

	Secondary current [A] / Class		
Primary current [A]	Burden [VA]	1 A Cl. 3 Art.-no.	1 A Cl. 1 Art.-no.
60	0,4	18S-0001	
75	0,5	18S-0002	
100	0,75	18S-0003	
125	0,75	18S-0004	
150	1	18S-0005	
200	0,4		18S-0006
	1,5	18S-0007	
250	0,5		18S-0008
	2	18S-0009	

		Art.-no.
	**Snap-on mounting, type H**	**55016**

- Split-core current transformers are mainly used for an easy fitment and subsequent assembly into an already existing installation, without separating the primary conductor.
- The compact split-core current transformer KBR 18S has been developed to have easy access in already existing installations.
- Due to the „click"-system and the fixing-clasps even a one-hand mounting is possible.
- The delivery follows with 2.5 m connection cable 2 x 0.5 mm² (color coded; S1 = brown; S2 = blue), other lengths of the connection cables are possible on request.
- Operating temperature: -5°C < T < +50°C
- Storage temperature: -25°C < T < +70°C

KBR 18

Split-core current transformer



Round conductor	18,5 mm
Transformer width	41,6 mm
Height	64,5 mm
Depth	68 mm

		Secondary current [A] / Class	
Primary current [A]	Burden [VA]	1 A Cl. 3 Art.-no.	1 A Cl. 1 Art.-no.
50	1	18-0001	
75	1	18-0006	
100	1,25	18-0011	
125	1,5	18-0016	
150	2	18-0021	
200	1		18-0027
	3	18-0026	
250	1,5		18-0032
	4	18-0031	

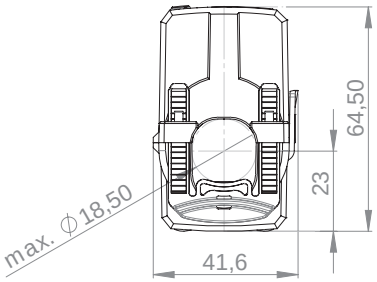

Optional mit Spannungsausgang:

Primary current [A]	Spannungsausgang [mV]	Class 1
50	0...333	18-1001
75	0...333	18-1006
100	0...333	18-1011
125	0...333	18-1016
150	0...333	18-1021
200	0...333	18-1026
250	0...333	18-1031

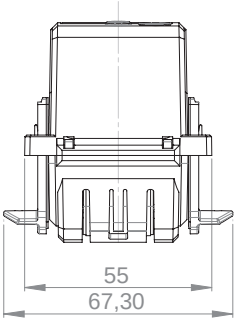

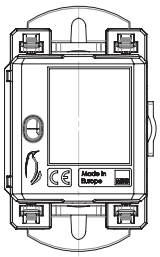

- Split-core current transformers are mainly used for an easy fitment and subsequent assembly into an already existing installation, without separating the primary conductor.
- The compact split-core current transformer KBR 18 has been developed to have easy access in already existing installations.
- Due to the „click"-system and the fixing-clasps even a one-hand mounting is possible.
- The delivery follows with 2.5 m connection cable 2 x 0.75 mm² (color coded;S1 = brown; S2 = blue), other lengths of the connection cables are possible on request.
- For the use as a current sensor the KBR 18 is optionally deliverable with a voltage output of 0 – 333 mV (Min. burden resistance ≥ 1 kΩ).
- Operating temperature: -5°C < T < +50°C
- Storage temperature: -25°C < T < +70°C

KBR 18L

Split-core current transformer



Round conductor	18,4 mm
Transformer width	49,0 mm
Height	80,1 mm
Depth	59 mm



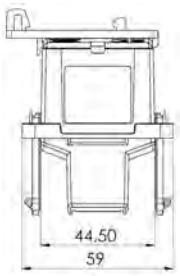

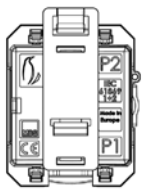

	Secondary current [A] / Class			
Primary current [A]	Burden [VA]	5 A Cl. 1 Art.-no.	5 A Cl. 0,5 Art.-no.	1 A Cl. 1 Art.-no.	1 A Cl. 0,5 Art.-no.
100	0,3			18L-0001	
125	0,5			18L-0002	
150	1	18L-5001		18L-0003	
200	0,2				18L-0004
	1,5	18L-5002		18L-0005	
250	0,5				18L-0006
	1		18L-5003		
	2	18L-5004			
	2,5			18L-0007	

		Art.-no.
	**Snap-on mounting, type I**	**55017**

- Split-core current transformers are mainly used for an easy fitment and subsequent assembly into an already existing installation, without separating the primary conductor.
- The compact split-core current transformer KBR 18L has been developed to have easy access in already existing installations.
- Due to the „click"-system and the fixing-clasps even a one-hand mounting is possible.
- The KBR 18L with secondary 1A will be delivered with 2.5 m connection cable 2 x 0.5 mm² (color coded; S1 = brown; S2 = blue). Other lengths of the connection cables are possible on request.
  The secondary 5A – version will be delivered with 0.5m connection cable 2 x 1.5 mm².
- Operating temperature: -5°C < T < +50°C
- Storage temperature: -25°C < T < +70°C

KBR 28

Split-core current transformer



Round conductor	27,9 mm
Transformer width	49,0 mm
Height	79,5 mm
Depth	59 mm

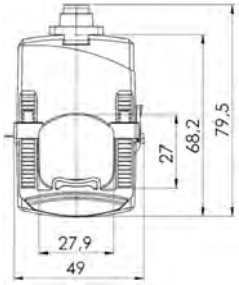

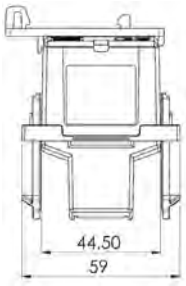

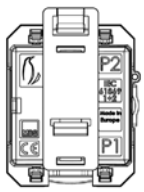

	Secondary current [A] / Class			
Primary current [A]	Burden [VA]	5 A Cl. 1 Art.-no.	5 A Cl. 0,5 Art.-no.	1 A Cl. 1 Art.-no.	1 A Cl. 0,5 Art.-no.
200	0,3			28-0001	
250	1	28-5001		28-0002	
300	1,5	28-5002		28-0003	
400	0,5				28-0004
	2,5	28-5003		28-0005	
500	1		28-5004		28-0006
	3	28-5005		28-0007	

		Art.-no.
	**Snap-on mounting, type I**	**55017**

- Split-core current transformers are mainly used for an easy fitment and subsequent assembly into an already existing installation, without separating the primary conductor.
- The compact split-core current transformer KBR 28 has been developed to have easy access in already existing installations.
- Due to the „click"-system and the fixing-clasps even a one-hand mounting is possible.
- The KBR 28 with secondary 1A will be delivered with 2.5 m connection cable 2 x 0.5 mm² (color coded; S1 = brown; S2 = blue). Other lengths of the connection cables are possible on request.
  The secondary 5A – version will be delivered with 0.5m connection cable 2x1.5 mm².
- Operating temperature: -5°C < T < +50°C
- Storage temperature: -25°C < T < +70°C

KBR 32

Split-core current transformer



Round conductor	32,5 mm
Transformer width	59,2 mm
Height	96,4 mm
Depth	90 mm

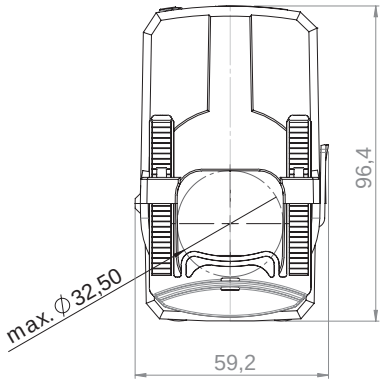

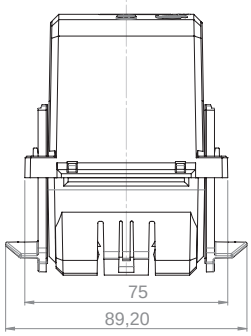

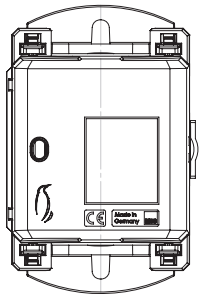

		Secondary current [A] / Class			
Primary current [A]	Burden [VA]	5 A Cl. 3 Art.-no.	5 A Cl. 1 Art.-no.	1 A Cl. 3 Art.-no.	1 A Cl. 1 Art.-no.
100	1,5	32-5011			
	2,5			32-0011	
125	2,5	32-5016			
	3			32-0016	
150	3	32-5021		32-0021	
200	3	32-5026			
	5			32-0026	
250	3	32-5031			
	5			32-0031	
300	2,5		32-5035		
	5				32-0035
400	5		32-5037		32-0037
500	5		32-5039		32-0039
600	5		32-5041		32-0041

Primary current [A]	Output signal		Cl. 1 Art.-no.
	[mV] AV	[mA] DC	
100	0...333	–	32-1011
	–	4...20	32-2011
125	0...333	–	32-1016
	–	4...20	32-2016
150	0...333	–	32-1021
	–	4...20	32-2021
200	0...333	–	32-1026
	–	4...20	32-2026
250	0...333	–	32-1031
	–	4...20	32-2031
300	0...333	–	32-1034
	–	4...20	32-2034
400	0...333	–	32-1036
	–	4...20	32-2036
500	0...333	–	32-1038
	–	4...20	32-2038
600	0...333	–	32-1040
	–	4...20	32-2040

- Split-core current transformers are mainly used for an easy fitment and subsequent assembly into an already existing installation, without separating the primary conductor.
- The compact split-core current transformer KBR 32 has been developed to have easy access in already existing installations.
- Due to the „click"-system and the fixing-clasps even a one-hand mounting is possible.
- The KBR 32 with secondary 1A will be delivered with 2.5 m connection cable 2 x 0.75 mm² (color coded; S1 = brown; S2 = blue). Other lengths of the connection cables are possible on request.
  The secondary 5A – version will be delivered with 0.5m connection cable 2 x 1.5 mm².
- For the use as a current sensor the KBR 32 is optionally deliverable with a voltage output of 0 – 333 mV (min. burden resistance ≥ 1 kΩ).
  Moreover the KBR 32 is deliverable as a measuring transducer with a measuring output of 4…20 mA DC, connection scheme see page 134.
- Operating temperature: -5°C < T < +50°C
- Storage temperature: -25°C < T < +70°C

KBR 42

Split-core current transformer



Round conductor	42,4 mm
Transformer width	67,0 mm
Height	96,0 mm
Depth	69 mm

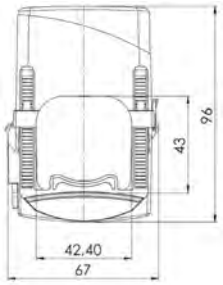

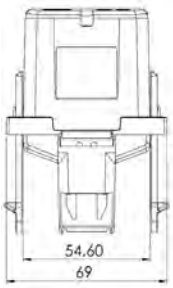



		Secondary current [A] / Class			
Primary current [A]	Burden [VA]	5 A Cl. 1 Art.-no.	5 A Cl. 0,5 Art.-no.	1 A Cl. 1 Art.-no.	1 A Cl. 0,5 Art.-no.
250	2,5			42-0001	
300	2,5	42-5001		42-0002	
400	2,5				42-0003
	5	42-5002		42-0004	
500	2,5				42-0005
	5	42-5003		42-0006	
600	2,5		42-5004		42-0007
	5	42-5005		42-0008	
750	2,5		42-5006		42-0009
	5	42-5007		42-0010	
800	2,5		42-5008		42-0011
	5	42-5009		42-0012	
1000	2,5		42-5010		42-0013
	5	42-5011		42-0014	

- Split-core current transformers are mainly used for an easy fitment and subsequent assembly into an already existing installation, without separating the primary conductor.
- The compact split-core current transformer KBR 42 has been developed to have easy access in already existing installations.
- Due to the „click"-system and the fixing-clasps even a one-hand mounting is possible.
- The KBR 42 with secondary 1A will be delivered with 2.5 m connection cable 2 x 0.5 mm² (color coded; S1 = brown; S2 = blue). Other lengths of the connection cables are possible on request.
  The secondary 5A – version will be delivered with 0.5m connection cable 2 x 1.5 mm².
- Operating temperature: -5°C < T < +50°C
- Storage temperature: -25°C < T < +70°C

KBR 42L

Split-core current transformer



Round conductor	2x 42,4 mm
Transformer width	67,0 mm
Height	139,0 mm
Depth	69 mm

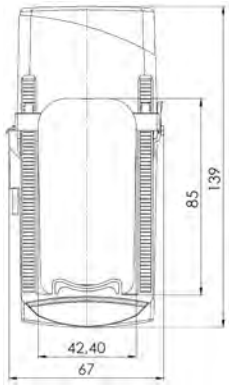

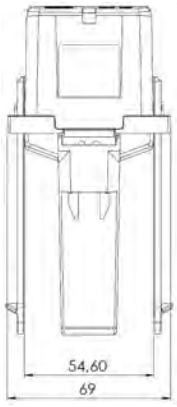



		Secondary current [A] / Class			
Primary current [A]	Burden [VA]	5 A Cl. 1 Art.-no.	5 A Cl. 0,5 Art.-no.	1 A Cl. 1 Art.-no.	1 A Cl. 0,5 Art.-no.
250	2,5			42L-0001	
300	2,5	42L-5001		42L-0002	
400	2,5				42L-0003
	5	42L-5002		42L-0004	
500	2,5				42L-0005
	5	42L-5003		42L-0006	
600	2,5		42L-5004		42L-0007
	5	42L-5005		42L-0008	
750	2,5		42L-5006		42L-0009
	5	42L-5007		42L-0010	
800	2,5		42L-5008		42L-0011
	5	42L-5009		42L-0012	
1000	2,5		42L-5010		42L-0013
	5	42L-5011		42L-0014	

- Split-core current transformers are mainly used for an easy fitment and subsequent assembly into an already existing installation, without separating the primary conductor.
- The compact split-core current transformer KBR 42L has been developed to have easy access in already existing installations.
- Due to the „click"-system and the fixing-clasps even a one-hand mounting is possible.
- The KBR 42L with secondary 1A will be delivered with 2.5 m connection cable 2 x 0.5 mm² (color coded; S1 = brown; S2 = blue). Other lengths of the connection cables are possible on request.
  The secondary 5A – version will be delivered with 0.5m connection cable 2 x 1.5 mm².
- Operating temperature: -5°C < T < +50°C
- Storage temperature: -25°C < T < +70°C



KBR 44

Split-core current transformer

Round conductor	44 mm
Transformer width	72,2 mm
Height	120,6 mm
Depth	98 mm

		Secondary current [A] / Class	
Primary current [A]	Burden [VA]	5 A Cl. 1 Art.-no.	1 A Cl. 1 Art.-no.
250	1,5	44-5001	
	2,5		44-0001
300	2,5	44-5006	44-0006
400	5	44-5011	44-0011
500	5	44-5016	44-0016
600	5	44-5021	44-0021
750	5	44-5026	44-0026
800	5	44-5031	44-0031
1000	5	44-5036	44-0036

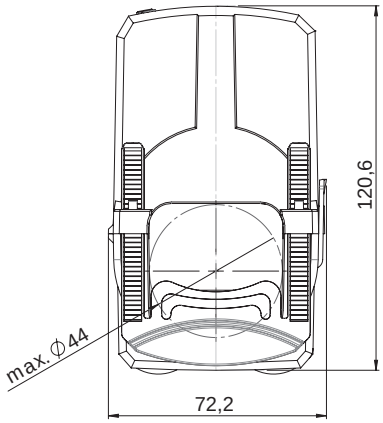

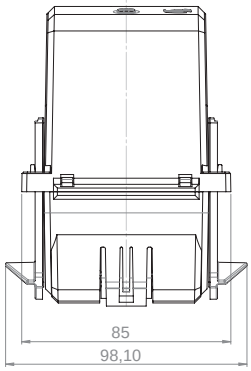

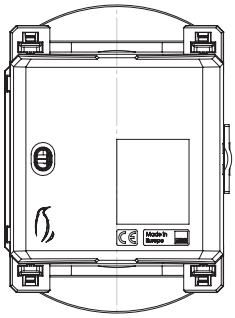

Primary current [A]	Output signal [mV] AV	Output signal [mA] DC	Cl. 1 Art.-no.
250	0...333	–	44-1001
	–	4...20	44-2001
300	0...333	–	44-1006
	–	4...20	44-2006
400	0...333	–	44-1011
	–	4...20	44-2011
500	0...333	–	44-1016
	–	4...20	44-2016
600	0...333	–	44-1021
	–	4...20	44-2021
750	0...333	–	44-1026
	–	4...20	44-2026
800	0...333	–	44-1031
	–	4...20	44-2031
1000	0...333	–	44-1036
	–	4...20	44-2036

- Split-core current transformers are mainly used for an easy fitment and subsequent assembly into an already existing installation, without separating the primary conductor.
- The compact split-core current transformer KBR 44 has been developed to have easy access in already existing installations.
- Due to the „click"-system and the fixing-clasps even a one-hand mounting is possible.
- The KBR 44 with secondary 1A will be delivered with 2.5 m connection cable 2 x 0.75 mm² (color coded; S1 = brown; S2 = blue). Other lengths of the connection cables are possible on request.
  The secondary 5A – version will be delivered with 0.5m connection cable 2 x 1.5 mm².
- For the use as a current sensor the KBR 32 is optionally deliverable with a voltage output of 0 – 333 mV (min. burden resistance ≥ 1 kΩ).
  Moreover the KBR 32 is deliverable as a measuring transducer with a measuring output of 4…20 mA DC.
- Operating temperature: -5°C < T < +50°C
- Storage temperature: -25°C < T < +70°C

KBR 32 / 44

Technical characteristics for the KBR 32 / 44 with output signal 4…20 mA:

- 2-wire connection, auxiliary power via output circuit
- Auxiliary power: 24 V DC ± 15 %, P_V = max. 1 VA
- Load-independent DC current: Live-zero, 4…20 mA
- External resistance: max. 300 Ω
- Current limit under overload: < 30 mA
- Residual ripple of the output current: ≤ 1 % p.p.
- Response time: < 300 ms

Wiring diagram of the KBR 32 / 44 (4…20 mA):

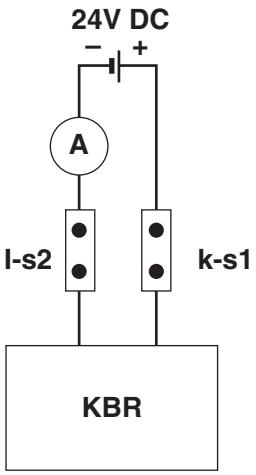

Low-voltage current transformers for industrial applications

Split-core current transformer

KBU 23	Busbar 1: 20 x 30 mm Round conductor: 20 mm Transformer width: 93 mm	Current range: 100 ... 400 A	Page: 136
KBU 58	Busbar 1: 50 x 80 mm Round conductor: 50 mm Transformer width: 125 mm	Current range: 250 ... 1000 A	Page: 137
KBU 812	Busbar 1: 80 x 120 mm Round conductor: 80 mm Transformer width: 155 mm	Current range: 250 ... 1500 A	Page: 138
KBU 816	Busbar 1: 80 x 160 mm Round conductor: 80 mm Transformer width: 195 mm	Current range: 1000 ... 5000 A	Page: 139

KBU 23

Split-core current transformer



Busbar 1	20 x 30 mm
Round conductor	20 mm
Transformer width	93 mm
Height	106 mm
Depth	58 mm

		Secondary current [A] / Class		
Primary current [A]	Burden [VA]	1 A Cl. 3 Art.-no.	1 A Cl. 1 Art.-no.	1 A Cl. 0,5 Art.-no.
100	1,25	80248		
150	1,5	80230		
200	2,5	80231		
250	1,5		80244	
300	3,75		80245	
400	1			80237
	5		80246	

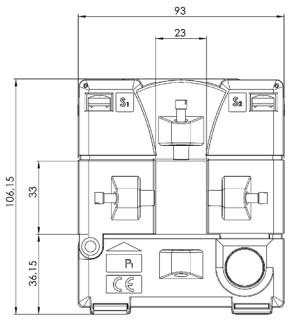

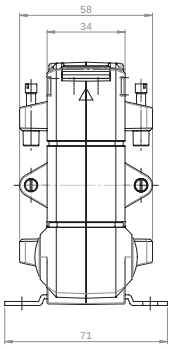

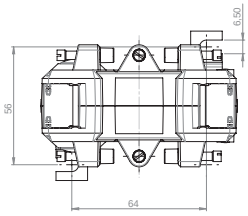

		Secondary current [A] / Class		
Primary current [A]	Burden [VA]	5 A Cl. 3 Art.-no.	5 A Cl. 1 Art.-no.	5 A Cl. 0,5 Art.-no.
100	1,25	80048		
150	1,5	80030		
200	2,5	80031		
250	1,5		80044	
300	3,75		80045	
400	1			80037
	5		80046	

KBU 58

Split-core current transformer



Busbar 1	50 x 80 mm
Round conductor	50 mm
Transformer width	125 mm
Height	158 mm
Depth	58 mm

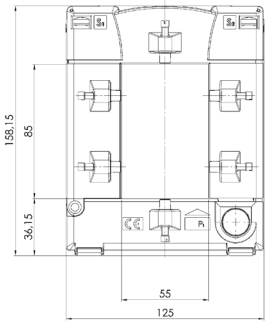

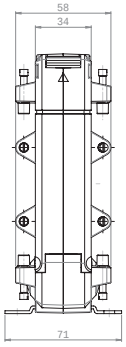

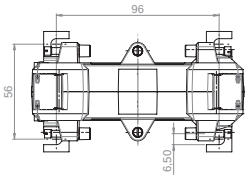

		Secondary current [A] / Class			
Primary current [A]	Burden [VA]	5 A Cl. 1 Art.-no.	5 A Cl. 0,5 Art.-no.	1 A Cl. 1 Art.-no.	1 A Cl. 0,5 Art.-no.
250	1,5	80061		80261	
300	2,5	80062		80262	
400	1		80038		80238
	2,5	80063		80263	
500	2,5		80054		80254
	5	80064		80264	
600	2,5		80055		80255
	5	80065		80265	
750	2,5		80056		80256
	5	80066		80266	
800	2,5		80057		80257
	7,5	80067		80267	
1000	5		80058		80258
	10	80068		80268	

KBU 812

Split-core current transformer



Busbar 1	80 x 120 mm
Round conductor	80 mm
Transformer width	155 mm
Height	198 mm
Depth	58 mm

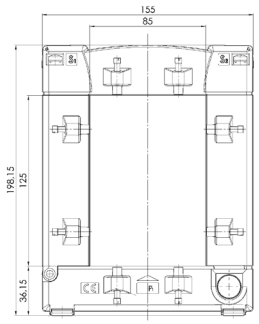

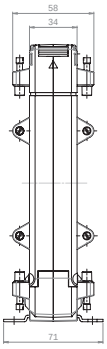

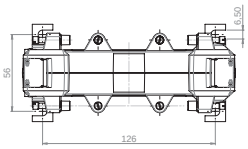

		Secondary current [A] / Class			
Primary current [A]	Burden [VA]	5 A Cl. 1 Art.-no.	5 A Cl. 0,5 Art.-no.	1 A Cl. 1 Art.-no.	1 A Cl. 0,5 Art.-no.
250	1,5	80091		80291	
300	2,5	80092		80292	
400	2,5	80093		80293	
500	2,5		80074		80274
	5	80094		80294	
600	2,5		80075		80275
	5	80095		80295	
750	2,5		80076		80276
	5	80096		80296	
800	2,5		80077		80277
	7,5	80097		80297	
1000	5		80078		80278
	10	80098		80298	
1200	5		80079		80279
	10	80099		80299	
1250	7,5		80080		80280
	15	80100		80300	
1500	7,5		80081		80281
	15	80101		80301	

KBU 816

Split-core current transformer



Busbar 1	80 x 160 mm
Round conductor	80 mm
Transformer width	195 mm
Height	243 mm
Depth	79 mm

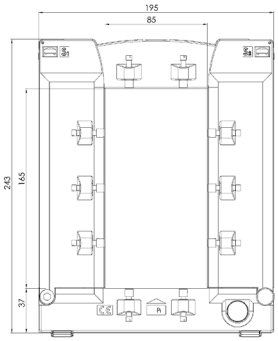

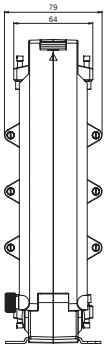

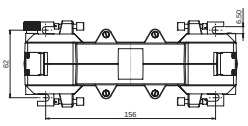

		Secondary current [A] / Class			
Primary current [A]	Burden [VA]	5 A Cl. 1 Art.-no.	5 A Cl. 0,5 Art.-no.	1 A Cl. 1 Art.-no.	1 A Cl. 0,5 Art.-no.
1000	10	80140	80110	80340	80310
	15	80141		80341	
1200	10	80142	80111	80342	80311
	15	80143		80343	
1500	10	80144	80112	80344	80312
	15	80145	80113	80345	80313
1600	10	80146	80114	80346	80314
	15	80147	80115	80347	80315
2000	10	80148	80116	80348	80316
	15	80149	80117	80349	80317
2500	10	80150	80119	80350	80319
	15	80151	80120	80351	80320
3000	15	80152	80122	80352	80322
	30	80153		80353	
4000	15	80154	80123	80354	80323
	30	80155	80124	80355	80324
5000	15	80156	80125	80356	80325
	30	80157	80126	80357	80326

Low-voltage current transformers for industrial applications

Summation current transformer

KSU	Inputs: 2 ... 3 pcs. Transformer width: 127 mm	Current range: 1 A or 5 A	Page: 143
SUSK	Inputs: 3 ... 8 pcs. Transformer width: 156 mm	Current range: 1 A or 5 A	Page: 144

Guidance when ordering summation current transformers

Summation current transformers are suitable for the summation of several synchronized alternating currents with similar phases but with differing load phase shifts. It is also possible to have the summation of currents with varied nominal voltages of similar phase positions. These measurements cannot be used for tariff applications, as the existing voltage differences are recorded as errors.

With the counter connection of the main transformer to the summation current transformer, it is possible to receive secondary currents which are proportional to the differences of the primary input currents.

The built-in technical know-how enables the summation current transformers to add secondary currents of varying nominal transmissions from the main transformer.

The secondary connections of each main transformer are connected to the allocated primary inputs of the summation current transformers.

The number of windings of individual partially wound primary circuits of the summation current transformer is proportionally aligned to the ratio of the primary nominal current of the corresponding main transformer, and to the sum of the nominal currents of all the summation current transformers being connected to the main transformer.

For the visual display of the current, a measuring unit can be used with a measuring range similar to the secondary nominal current of the summation current transformers.

It is irrelevant for the main transformers with similar nominal transmission ratios, to which primary circuit of the summation current transformer the connection is made.

With main transformers of different nominal transmission ratios, care must be taken to adhere to the assigned connection to the terminals of the summation current transformers.
Is the current flow in the main transformer interrupted, the secondary circuit of the main transformer must neither be short-circuited nor be connected to the summation current transformer, or to the main transformer.

Summation current transformers with unallocated primary circuits must remain open for a later connection to an additional main transformer. The secondary output current of the summation current transformer is in this instance lower than the secondary nominal current of the summation current transformer by a quantity equal to the ratio of the primary nominal current of this ”missing“ main transformer and the sum of all the primary nominal currents of the main transformer.

The nominal secondary current of a main transformer must be equal to the nominal primary current of the input allocation of the summation current transformer.

Guidance when ordering summation current transformers

Please find below an example for the correct selection of measuring components for summation current transformers.

Example:

Actual situation:	3 transmission ratios	1000 / 5 A
		800 / 5 A
		600 / 5 A
	Total current	2400 / 5 A
Burden:	– 1 current meter	
	– 1 power recorder	
Looking for:	1 summation current transformer and the VA power of an individual main transformer	

Required active performance of the summation current transformer:

Current meter	1.5 VA
Power recorder	7.0 VA
Measurement conductor loss	1.5 VA
Consumption P_0 summation CT	4.0 VA
Interim result	14.0 VA

The each main CT has to provide a part of this 14.0 VA corresponding to its ratio of the "total current".

Consideration must also be given to the respective power loss between the main transformer and the summation transformer plus other possible losses.

1. Main transformer 1000 / 5A $\frac{1000}{2400}$ x 14.0 = 5.83 VA + additional possible losses

2. Main transformer 800 / 5A $\frac{800}{2400}$ x 14.0 = 4.67 VA + additional possible losses

3. Main transformer 600 / 5A $\frac{600}{2400}$ x 14.0 = 3.50 VA + additional possible losses

The VA values of the main transformers are to be rounded up to the corresponding VA values in our charts.

The ratio of the primary current of a main transformer to the sum of the primary currents of all main current transformers must not exceed 1:8.

Important indication to the power measuring

Too many rising deviation can prevent the measuring transformer acting as a current transformer from fulfilling its protective function with regard to the connected measuring units, as in normal operation its functions are well below its saturation limit, and in the event of over currents, the saturation limit is reached considerably later and takes the function almost as a protection current transformer.

If there is too much of a decrease, the measuring transformer, as a result of the continuous excess demands will reach the saturation limit too soon and indirectly function as a switch, rendering a measuring impossible.

KSU 2...3

Summation current transformer



Transformer width	127 mm
Height	90 mm
Depth	57 mm

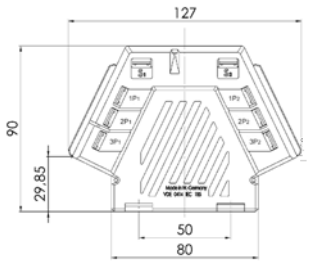

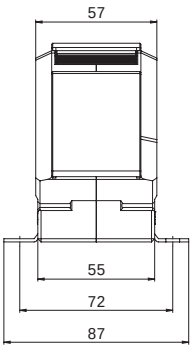

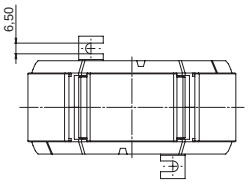

Inputs	Primary current [A]	Secondary current [A] / Class: Burden [VA]	5 A Cl. 1 Art.-no.	5 A Cl. 0,5 Art.-no.	1 A Cl. 1 Art.-no.	1 A Cl. 0,5 Art.-no.
2	1	5	41114	41111	41314	41311
		10	41115	41112	41315	41312
		15	41116	41113	41316	41313
		20	41117		41317	
		25	41118		41318	
	5	5	41014	41011	41214	41211
		10	41015	41012	41215	41212
		15	41016	41013	41216	41213
		20	41017		41217	
3	1	5	41130	41127	41330	41327
		10	41131	41128	41331	41328
		15	41132	41129	41332	41329
	5	5	41030	41027	41230	41227
		10	41031	41028	41231	41228
		15	41032	41029	41232	41229

		Art.-no.
	**Snap-on mounting**	**–**
	**Sealed shutter, type B**	**59041**

Connection example for different ratios:

AK-AL = 1000/5
BK-BL = 800/5
CK-CL = 600/5

Connection diagram

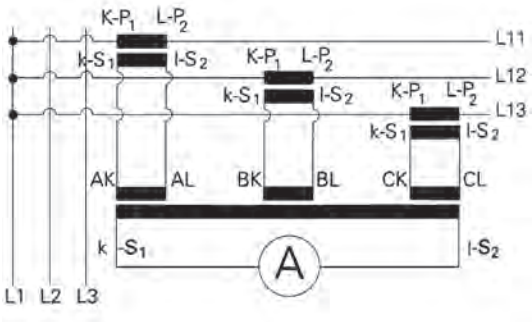

SUSK 3...8

Summation current transformer

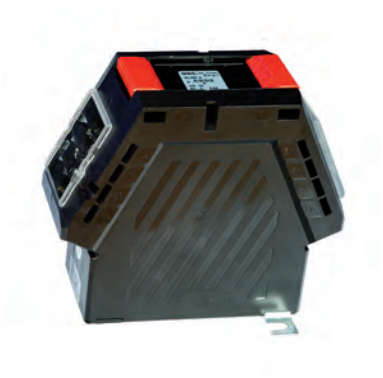

Transformer width	156 mm
Height	136,5 mm
Depth	65 mm

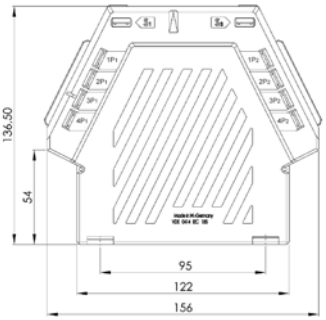

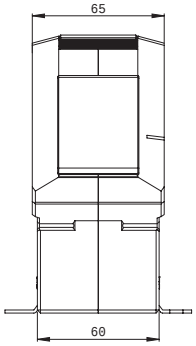

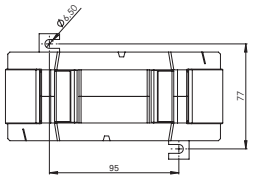

		Secondary current [A] / Class				
Inputs	Primary current [A]	Burden [VA]	5 A Cl. 1 Art.-no.	5 A Cl. 0,5 Art.-no.	1 A Cl. 1 Art.-no.	1 A Cl. 0,5 Art.-no.
3	1	5	40115	40111	40315	40311
		10	40116	40112	40316	40312
		15	40117	40114	40317	40314
		30	40118		40318	
	5	5	40015	40011	40215	40211
		10	40016	40012	40216	40212
		15	40017	40014	40217	40214
		30	40018		40218	
4	1	5	40126	40123	40326	40323
		10	40127	40124	40327	40324
		15	40128	40125	40328	40325
		25	40129		40329	
		30	40130		40330	
	5	5	40026	40023	40226	40223
		10	40027	40024	40227	40224
		15	40028	40025	40228	40225
		25	40029		40229	
		30	40030		40230	
5	1	5	40137	40134	40337	40334
		10	40138	40135	40338	40335
		15	40139	40136	40339	40336
		30	40140		40340	
	5	5	40037	40034	40237	40234
		10	40038	40035	40238	40235
		15	40039	40036	40239	40236
		30	40040		40240	
6	1	5	40148	40145	40348	40345
		10	40149	40146	40349	40346
		15	40150	40147	40350	40347
		30	40151		40351	
	5	5	40048	40045	40248	40245
		10	40049	40046	40249	40246
		15	40050	40047	40250	40247
		30	40051		40251	
7	1	5	40160	40157	40360	40357
		10	40161	40158	40361	40358
		15	40162	40159	40362	40359
		30	40163		40363	
	5	5	40060	40057	40260	40257
		10	40061	40058	40261	40258
		15	40062	40059	40262	40259
		30	40063		40263	
8	1	5	40171	40168	40371	40368
		10	40172	40169	40372	40369
		15	40173	40170	40373	40370
		30	40174		40374	
	5	5	40071	40068	40271	40268
		10	40072	40069	40272	40269
		15	40073	40070	40273	40270
		30	40074		40274	

		Art.-no.
	**Snap-on mounting**	**–**
	**Sealed shutter, type B**	**59041**
	**Sealed shutter, type C**	**59042**

Connection diagram

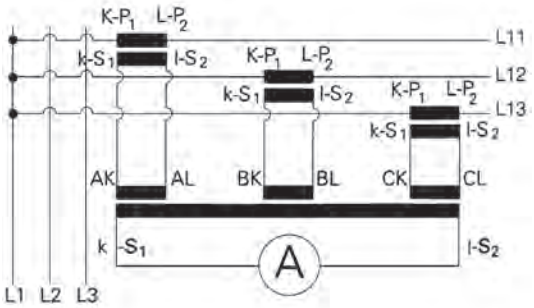

Low-voltage current transformers for industrial applications

Current transformer for fuse disconnector of size 1, 2 and 3

NH 6.1 **NH 6.1 2U**	Busbar 1: 24 x 6 mm Transformer width: 52 mm	Current range: 100 ... 300 A	Page: 148
NH 6.2 **NH 6.2 2U**	Busbar 1: 30 x 6 mm Transformer width: 60 mm	Current range: 100 ... 400 A	Page: 149
NH 6.3 **NH 6.3 2U**	Busbar 1: 32 x 6 mm Transformer width: 74 mm	Current range: 150 ... 600 A	Page: 150

Current transformer for fuse disconnector of size 1, 2 and 3

Housing material: Technyl A20 V25 N025, 200 °C

Configuration: Current transformers for direct fitment in connection with low voltage high performance fuses with contact-knives and NH-fuse sets according to DIN 43620/1.
NH current transformers are arranged with 2 or 4 tip yescks respectively and can be operated continuously in open state.
Loss motion voltage / open circuit voltage with sec. 5 A approx. 3 – 6 V and with sec. 1 A approx. 13 – 25 V.
The current transformers can also be supplied in dual change-over mode for secondary application.











Busbar 1	24 x 6 mm
Transformer width	52 mm
Height	68,5 mm
Depth	23 mm

NH 6.1

Current transformer for fuse disconnectors

		Secondary current [A] / Class	
Primary current [A]	Burden [VA]	5 A Cl. 3 Art.-no.	1 A Cl. 3 Art.-no.
100	1,25	50011	50211
150	2,5	50012	50212
200	3,5	50013	50213
250	4	50014	50214
300	5	50015	50215

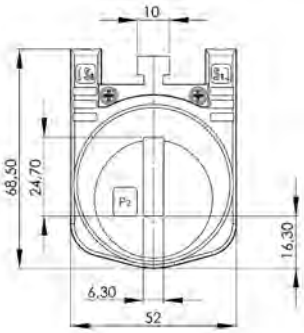

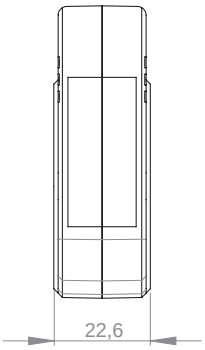

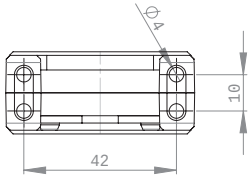

NH 6.1 2U

Current transformer for fuse disconnectors, secondary reconnectable

		Secondary current [A] / Class	
Primary current [A]	Burden [VA]	5 A Cl. 3 Art.-no.	1 A Cl. 3 Art.-no.
200-100	2,5-1,25	50111	50311
300-150	5-2,5	50112	50312

		Art.-no.
	**Snap-on mounting**	–
	**Sealed shutter**	–

NH 6.2

Current transformer for fuse disconnectors



Busbar 1	30 x 6 mm
Transformer width	60 mm
Height	74,5 mm
Depth	24 mm

		Secondary current [A] / Class	
Primary current [A]	Burden [VA]	5 A Cl. 3 Art.-no.	1 A Cl. 3 Art.-no.
100	1,25	50021	50221
150	2,5	50022	50222
200	3,5	50023	50223
250	4	50024	50224
300	5	50025	50225
400	5	50026	50226

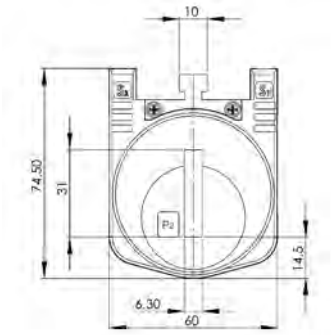

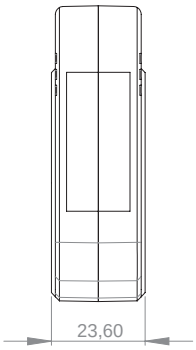

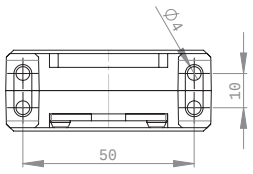

NH 6.2 2U

Current transformer for fuse disconnectors, secondary reconnectable

		Secondary current [A] / Class	
Primary current [A]	Burden [VA]	5 A Cl. 3 Art.-no.	1 A Cl. 3 Art.-no.
200-100	2,5-1,25	50121	50321
300-150	5-2,5	50122	50322
400-200	5-2,5	50123	50323

		Art.-no.
	**Snap-on mounting**	–
	**Sealed shutter**	–

NH 6.3

Current transformer for fuse disconnectors



Busbar 1	32 x 6 mm
Transformer width	74 mm
Height	89 mm
Depth	24 mm

	Secondary current [A] / Class	
Primary current [A]	Burden [VA]	5 A Cl. 3 Art.-no.	1 A Cl. 3 Art.-no.
150	2,5	50031	50231
200	3,5	50032	50232
250	4	50033	50233
300	5	50034	50234
400	5	50035	50235
500	5	50036	50236
600	10	50037	50237

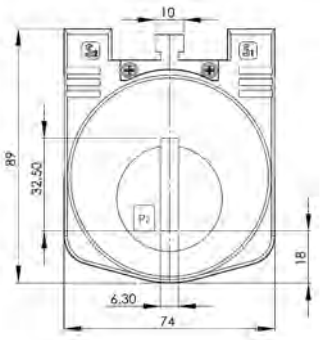

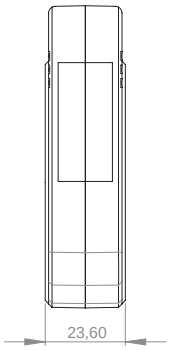

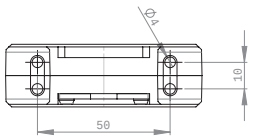

NH 6.3 2U

Current transformer for fuse disconnectors, secondary reconnectable

	Secondary current [A] / Class	
Primary current [A]	Burden [VA]	5 A Cl. 3 Art.-no.	1 A Cl. 3 Art.-no.
300-150	5-2,5	50131	50331
400-200	5-2,5	50132	50332
600-300	10-5	50133	50333

		Art.-no.
	**Snap-on mounting**	–
	**Sealed shutter**	–

Low-voltage current transformers for industrial applications

Protection Tubular current transformer

SASR 22.3 Round conductor: 22,5 mm Current range: 100 ... 300 A Page: 154
Transformer width: 61 mm

Protection plug-in current transformer

SASK 21.3 Busbar 1: 20 x 10 mm Current range: 125 ... 200 A Page: 155
Round conductor: 19,2 mm
Transformer width: 61 mm

SASK 421.4 Busbar 1: 20 x 10 mm Current range: 100 ... 400 A Page: 156
Round conductor: 20 mm
Transformer width: 71 mm

SASK 31.5 Busbar 1: 30 x 10 mm Current range: 75 ... 750 A Page: 157
Busbar 2: 2x 20 x 10 mm
Round conductor: 28 mm
Transformer width: 61 mm

SASK 31.6 Busbar 1: 30 x 10 mm Current range: 50 ... 750 A Page: 158
Busbar 2: 20 x 13 mm
Round conductor: 23 mm
Transformer width: 95 mm

SASK 41.4 Busbar 1: 40 x 10 mm Current range: 100 ... 750 A Page: 162
Busbar 2: 2x 30 x 5 mm
Round conductor: 32 mm
Transformer width: 71 mm

SASK 541.4 Busbar 1: 40 x 10 mm Current range: 100 ... 1000 A Page: 163
Busbar 2: 2x 30 x 5 mm
Round conductor: 32 mm
Transformer width: 86 mm

SASK 41.6	Busbar 1: 40 x 12 mm Busbar 2: 30 x 15 mm Round conductor: 32 mm Transformer width: 95 mm	Current range: 75 ... 750 A	Page: 165
SASK 41.10	Busbar 1: 40 x 10 mm Round conductor: 32 mm Transformer width: 150 mm	Current range: 75 ... 800 A	Page: 167
SASK 51.4	Busbar 1: 50 x 10 mm Busbar 2: 2x 40 x 10 mm Round conductor: 44 mm Transformer width: 86 mm	Current range: 150 ... 1000 A	Page: 171
SASK 51.6	Busbar 1: 50 x 12 mm Busbar 2: 2x 40 x 10 mm Round conductor: 40 mm Transformer width: 95 mm	Current range: 150 ... 1000 A	Page: 172
SASK 61.4	Busbar 1: 60 x 10 mm Busbar 2: 2x 50 x 10 mm Round conductor: 44 mm Transformer width: 96 mm	Current range: 200 ... 1250 A	Page: 174
SASK 61.10	Busbar 1: 60 x 10 mm Busbar 2: 2x 50 x 10 mm Round conductor: 30 mm Transformer width: 150 mm	Current range: 100 ... 1500 A	Page: 175
SASK 63.6	Busbar 1: 60 x 30 mm Round conductor: 30 mm Transformer width: 88 mm	Current range: 200 ... 1000 A	Page: 179
SASK 127.6	Busbar 1: 120 x 70 mm Round conductor: 70 mm Transformer width: 205 mm		Page: 180
SASK 129.10	Busbar 1: 120 x 90 mm Round conductor: 90 mm Transformer width: 250 mm		Page: 180

Protection current transformers – Technical concepts

Application: Current transformers are for the galvanic separation, proportional transformation of alternating currents of larger currents into smaller, direct measurable values. There are two categories subject to their application:

– Measuring current transformers
– Protection current transformers

All current transformers manufactured by MBS are for low voltage applications with a max. phase to phase voltage of 0.72 kV.

Measuring current transformers: Measuring transformers are used to measure current, power, power factor and energy consumption combined with an equivalent measurement unit. Using its magnetic circle, current transformers allow a high transmission accuracy in the nominal current range, whilst simultaniously protecting the connected appliances against over current. The magnetic saturation in the measuring core ensures protection in the event of an over current.

Protection current transformers: Protection current transformers are for the control of protecting relays which have the task to separate switched circuits in the event of over current. For a save function of these relays a proportional transfer ratio of the transformer up to a multiple of the nominal current is necessary. The dimensioning of this transformer unit secures a proportional current transfer, up to a multiple of the nominal currents, determined by the protection class.

Technical standards: All MBS current transformers are produced in accordance with the technical requirements of IEC 61869-1 + 2 (former DIN EN 60044-1)

Technical characteristics: Application use: Indoors, without condensation

Protection current transformers:

Ambient temperature:	–5 °C....+40 °C.
Housing material:	Polycarbonate, self-extinguishing
Housing form:	halve-cup shaped, ultrasonically welded
Isolation class:	E
Thermal rated nominal continuous current:	1.2 x I_{pr}
Secondary rated currents:	5 A or 1 A
Thermal rated short-time current:	60 x I_{pr} (max. 100 kA)
Max. excess temperature of the secondary winding:	75 K
Isolation test voltage:	3 kV U_{eff}; 50 Hz, 1 min

Safety note: Due to the physical operating principle, dangerous voltages for humans can occur at the current transformer's terminals when operating with an open circuit. Voltages of several kilovolts can occur, especially with protective current transformers. To avoid personal injury or damage to the transformer, this operating condition is prohibited.

Ordering instructions: For the correct processing of your order, please make available the following specification:

Transformer type
Transmission ratio
Accuracy class
Rated burden

Accuracy classes of current transformers														
Class	Current error (± %) by % I_{pr}							Phase displacement error (± minutes) by % I_{pr}						Total error by $n \times I_{pr}$
	1 %	5 %	20 %	50 %	100 %	120 %		1 %	5 %	20 %	50 %	100 %	120 %	
Measuring current transformer														
0.2s	0,75	0,35	0,20	–	0,20	0,20		30	15	10	–	10	10	>10
0.2	–	0,75	0,35	–	0,20	0,20		–	30	15	–	10	10	>10
0.5s	1,50	0,75	0,50	–	0,50	0,50		90	45	30	–	30	30	>10
0.5	–	1,50	0,75	–	0,50	0,50		–	90	45	–	30	30	>10
1	–	3,00	1,50	–	1,00	1,00		–	180	90	–	60	60	>10
3	–	–	3,00	3,00	3,00	3,00		–	–	–	120	120	120	>10
Protection current transformer														
5P(n)	–	3,00	1,50	–	1,00	1,00		–	180	90	–	60	60	< 5
10P(n)	–	–	–	3,00	3,00	3,00		–	–	–	120	120	120	<10
n... over current limiting factor														

SASR 22.3

Protection Tubular current transformer



Round conductor	22,5 mm
Transformer width	61 mm
Height	75,5 mm
Depth	35 mm

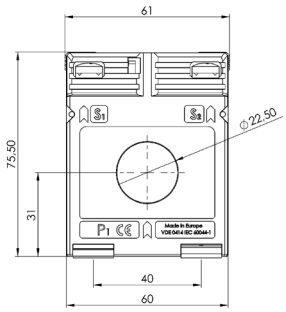

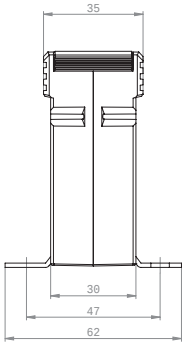

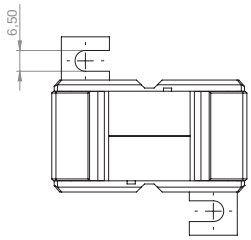

	Secondary current [A] / Class			
Primary current [A]	Burden [VA]	5 A Cl. 5P5 Art.-no.	5 A Cl. 10P5 Art.-no.	1 A Cl. 5P5 Art.-no.	1 A Cl. 10P5 Art.-no.
100	1			S04-1316B	S04-1317B
125	1	S04-1506B	S04-1507B		
	1,5			S04-1516C	S04-1517C
150	1	S04-1606B	S04-1607B		
	1,5			S04-1616C	S04-1617C
200	1	S04-1706B	S04-1707B		
	1,5			S04-1716C	S04-1717C
250	1	S04-1806B	S04-1807B		
	1,5			S04-1816C	S04-1817C
300	1	S04-1906B	S04-1907B		
	1,5		S04-1907C	S04-1916C	S04-1917C

		Art.-no.
	**Snap-on mounting, type A**	**53011**
	**Sealed shutter, type A**	**59040**

SASK 21.3

Protection plug-in current transformer



Busbar 1	20 x 10 mm
Round conductor	19,2 mm
Transformer width	61 mm
Height	75,5 mm
Depth	48 mm

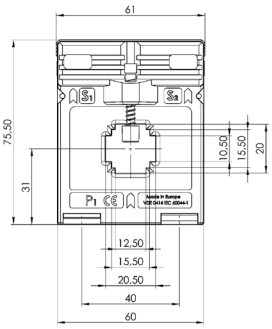

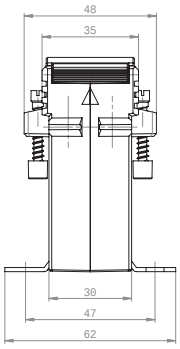

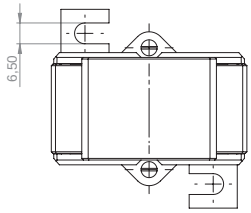

	Secondary current [A] / Class			
Primary current [A]	Burden [VA]	5 A Cl. 5P5 Art.-no.	5 A Cl. 10P5 Art.-no.	1 A Cl. 5P5 Art.-no.	1 A Cl. 10P5 Art.-no.
125	1	S03-1506B	S03-1507B		
	1,5			S03-1516C	S03-1517C
150	1	S03-1606B	S03-1607B		
	1,5			S03-1616C	S03-1617C
200	1	S03-1706B	S03-1707B		
	1,5			S03-1716C	S03-1717C

		Art.-no.
	**Snap-on mounting, type A**	**53011**
	**Sealed shutter, type A**	**59040**

SASK 421.4

Protection plug-in current transformer



Busbar 1	20 x 10 mm
Round conductor	20 mm
Transformer width	71 mm
Height	85,5 mm
Depth	58 mm

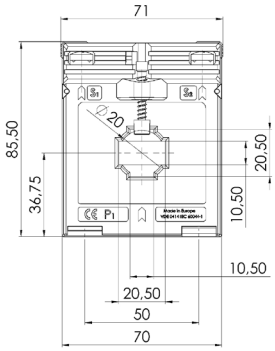

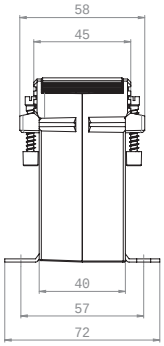

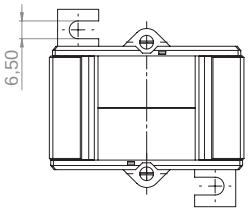

	Secondary current [A] / Class			
Primary current [A]	Burden [VA]	5 A Cl. 5P5 Art.-no.	5 A Cl. 10P5 Art.-no.	1 A Cl. 5P5 Art.-no.	1 A Cl. 10P5 Art.-no.
100	2,5	S23-1306D	S23-1307D	S23-1316D	S23-1317D
150	2,5	S23-1606D	S23-1607D	S23-1616D	S23-1617D
200	1,5	S23-1706C	S23-1707C	S23-1716C	S23-1717C
	2,5	S23-1706D	S23-1707D	S23-1716D	S23-1717D
250	1,5	S23-1806C	S23-1807C	S23-1816C	S23-1817C
	2,5	S23-1806D	S23-1807D	S23-1816D	S23-1817D
300	1,5	S23-1906C	S23-1907C	S23-1916C	S23-1917C
	2,5	S23-1906D	S23-1907D	S23-1916D	S23-1917D
400	1,5	S23-2006C	S23-2007C	S23-2016C	S23-2017C
	2,5	S23-2006D	S23-2007D	S23-2016D	S23-2017D

		Art.-no.
	**Snap-on mounting**	**–**
	**Sealed shutter, type B**	**59041**

SASK 31.5

Protection plug-in current transformer



Busbar 1	30 x 10 mm
Busbar 2	2 x 20 x 10 mm
Round conductor	28 mm
Transformer width	61 mm
Height	75,5 mm
Depth	68 mm

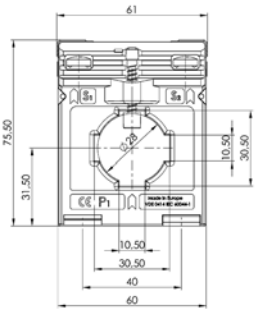

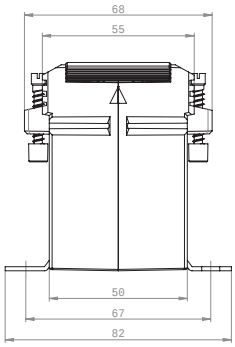

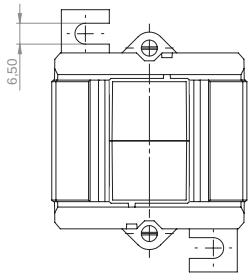

	Secondary current [A] / Class			
Primary current [A]	Burden [VA]	5 A Cl. 5P5 Art.-no.	5 A Cl. 10P5 Art.-no.	1 A Cl. 5P5 Art.-no.	1 A Cl. 10P5 Art.-no.
75	1			S17-1116B	S17-1117B
80	1			S17-1216B	S17-1217B
100	1	S17-1306B	S17-1307B		
	1,5			S17-1316C	S17-1317C
125	1	S17-1506B	S17-1507B		
	1,5		S17-1507C	S17-1516C	S17-1517C
150	1	S17-1606B	S17-1607B		
	1,5	S17-1606C	S17-1607C	S17-1616C	S17-1617C
200	1	S17-1706B	S17-1707B		
	1,5	S17-1706C	S17-1707C	S17-1716C	S17-1717C
	2,5	S17-1706D	S17-1707D	S17-1716D	S17-1717D
250	1,5	S17-1806C	S17-1807C	S17-1816C	S17-1817C
	2,5	S17-1806D	S17-1807D	S17-1816D	S17-1817D
300	1,5	S17-1906C	S17-1907C	S17-1916C	S17-1917C
	2,5	S17-1906D	S17-1907D	S17-1916D	S17-1917D
400	1,5	S17-2006C	S17-2007C	S17-2016C	S17-2017C
	2,5	S17-2006D	S17-2007D	S17-2016D	S17-2017D
500	1,5	S17-2106C	S17-2107C	S17-2116C	S17-2117C
	2,5	S17-2106D	S17-2107D	S17-2116D	S17-2117D
600	1,5	S17-2206C	S17-2207C	S17-2216C	S17-2217C
	2,5	S17-2206D	S17-2207D	S17-2216D	S17-2217D
750	1,5	S17-2306C	S17-2307C	S17-2316C	S17-2317C
	2,5	S17-2306D	S17-2307D	S17-2316D	S17-2317D

		Art.-no.
	**Snap-on mounting, type C**	**55011**
	**Sealed shutter, type B**	**59041**

SASK 31.6

Protection plug-in current transformer



Busbar 1	30 x 10 mm
Busbar 2	20 x 13 mm
Round conductor	23 mm
Transformer width	95 mm
Height	116 mm
Depth	74 mm

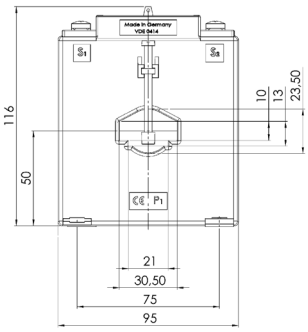

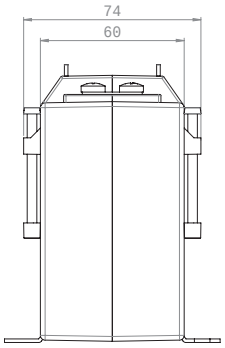

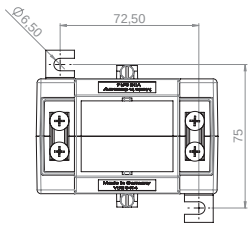

		Secondary current [A] / Class		
Primary current [A]	Burden [VA]	5 A Cl. 5P5 Art.-no.	5 A Cl. 10P5 Art.-no.	5 A Cl. 5P10 Art.-no.
50	1,5	S19-0906C	S19-0907C	
	2,5	S19-0906D	S19-0907D	
60	1,5	S19-1006C	S19-1007C	
	2,5	S19-1006D	S19-1007D	
80	1,5			S19-1208C
	2,5	S19-1206D	S19-1207D	
	5	S19-1206F	S19-1207F	
100	1,5	S19-1306C	S19-1307C	S19-1308C
	2,5	S19-1306D	S19-1307D	S19-1308D
	5	S19-1306F	S19-1307F	
150	2,5	S19-1606D	S19-1607D	S19-1608D
	5	S19-1606F	S19-1607F	S19-1608F
	7,5	S19-1606G	S19-1607G	
200	2,5	S19-1706D	S19-1707D	S19-1708D
	5	S19-1706F	S19-1707F	S19-1708F
	7,5	S19-1706G	S19-1707G	
	10	S19-1706H	S19-1707H	
250	2,5	S19-1806D	S19-1807D	S19-1808D
	5	S19-1806F	S19-1807F	S19-1808F
	7,5	S19-1806G	S19-1807G	
	10	S19-1806H	S19-1807H	
300	2,5	S19-1906D	S19-1907D	S19-1908D
	5	S19-1906F	S19-1907F	S19-1908F
	10	S19-1906H	S19-1907H	
400	2,5	S19-2006D	S19-2007D	S19-2008D
	5	S19-2006F	S19-2007F	S19-2008F
	7,5	S19-2006G	S19-2007G	S19-2008G
	10	S19-2006H	S19-2007H	S19-2008H
	15	S19-2006J	S19-2007J	
500	2,5	S19-2106D	S19-2107D	S19-2108D
	5	S19-2106F	S19-2107F	S19-2108F
	7,5	S19-2106G	S19-2107G	S19-2108G
	10	S19-2106H	S19-2107H	S19-2108H
	15	S19-2106J	S19-2107J	
600	2,5	S19-2206D	S19-2207D	S19-2208D
	5	S19-2206F	S19-2207F	S19-2208F
	7,5	S19-2206G	S19-2207G	S19-2208G
	10	S19-2206H	S19-2207H	S19-2208H
	15	S19-2206J	S19-2207J	
750	2,5	S19-2306D	S19-2307D	S19-2308D
	5	S19-2306F	S19-2307F	S19-2308F
	7,5	S19-2306G	S19-2307G	S19-2308G
	10	S19-2306H	S19-2307H	S19-2308H
	15	S19-2306J	S19-2307J	

SASK 31.6

Protection plug-in current transformer



Busbar 1	30 x 10 mm
Busbar 2	20 x 13 mm
Round conductor	23 mm
Transformer width	95 mm
Height	116 mm
Depth	74 mm

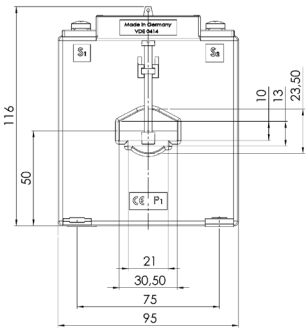

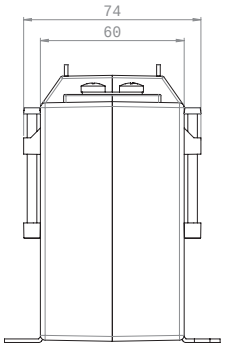

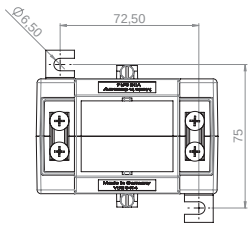

	Secondary current [A] / Class		
Primary current [A]	Burden [VA]	5 A Cl. 10P10 Art.-no.	5 A Cl. 5P15 Art.-no.	5 A Cl. 10P15 Art.-no.
60	1,5	S19-1009C		
80	1,5	S19-1209C		
100	1,5	S19-1309C	S19-130AC	S19-130BC
	2,5	S19-1309D		
150	2,5	S19-1609D	S19-160AD	S19-160BD
	5	S19-1609F		
200	2,5	S19-1709D	S19-170AD	S19-170BD
	5	S19-1709F		
250	2,5	S19-1809D	S19-180AD	S19-180BD
	5	S19-1809F		
300	2,5	S19-1909D	S19-190AD	S19-190BD
	5	S19-1909F		
400	2,5	S19-2009D	S19-200AD	S19-200BD
	5	S19-2009F	S19-200AF	S19-200BF
	7,5	S19-2009G		
	10	S19-2009H		
500	2,5	S19-2109D	S19-210AD	S19-210BD
	5	S19-2109F	S19-210AF	S19-210BF
	7,5	S19-2109G		
	10	S19-2109H		
600	2,5	S19-2209D	S19-220AD	S19-220BD
	5	S19-2209F	S19-220AF	S19-220BF
	7,5	S19-2209G		
	10	S19-2209H		
750	2,5	S19-2309D	S19-230AD	S19-230BD
	5	S19-2309F	S19-230AF	S19-230BF
	7,5	S19-2309G		
	10	S19-2309H		

		Art.-no.
	**Snap-on mounting**	–
	**Sealed shutter, type E**	**59044**

SASK 31.6

Protection plug-in current transformer



Busbar 1	30 x 10 mm
Busbar 2	20 x 13 mm
Round conductor	23 mm
Transformer width	95 mm
Height	116 mm
Depth	74 mm

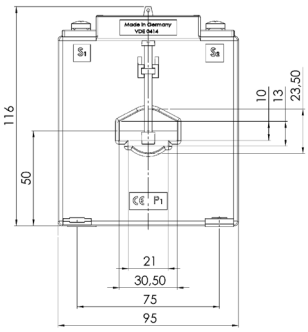

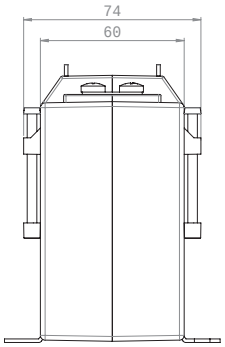

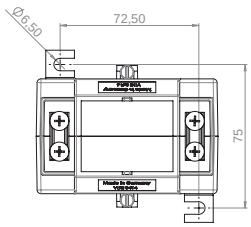

		Secondary current [A] / Class		
Primary current [A]	Burden [VA]	1 A Cl. 5P5 Art.-no.	1 A Cl. 10P5 Art.-no.	1 A Cl. 5P10 Art.-no.
50	1,5	S19-0916C	S19-0917C	
	2,5	S19-0916D	S19-0917D	
60	1,5	S19-1016C	S19-1017C	S19-1018C
	2,5	S19-1016D	S19-1017D	
80	1,5	S19-1216C	S19-1217C	S19-1218C
	2,5	S19-1216D	S19-1217D	S19-1218D
	5		S19-1217F	
100	2,5	S19-1316D	S19-1317D	S19-1318D
	5	S19-1316F	S19-1317F	
150	2,5	S19-1616D	S19-1617D	S19-1618D
	5	S19-1616F	S19-1617F	S19-1618F
200	2,5	S19-1716D	S19-1717D	S19-1718D
	5	S19-1716F	S19-1717F	S19-1718F
	7,5	S19-1716G	S19-1717G	
	10	S19-1716H	S19-1717H	
250	2,5	S19-1816D	S19-1817D	S19-1818D
	5	S19-1816F	S19-1817F	S19-1818F
	7,5	S19-1816G	S19-1817G	
	10	S19-1816H	S19-1817H	
300	2,5	S19-1916D	S19-1917D	S19-1918D
	5	S19-1916F	S19-1917F	S19-1918F
	10	S19-1916H	S19-1917H	
400	2,5	S19-2016D	S19-2017D	S19-2018D
	5	S19-2016F	S19-2017F	S19-2018F
	7,5	S19-2016G	S19-2017G	S19-2018G
	10	S19-2016H	S19-2017H	S19-2018H
	15	S19-2016J	S19-2017J	
500	2,5	S19-2116D	S19-2117D	S19-2118D
	5	S19-2116F	S19-2117F	S19-2118F
	7,5	S19-2116G	S19-2117G	S19-2118G
	10	S19-2116H	S19-2117H	S19-2118H
	15	S19-2116J	S19-2117J	
600	2,5	S19-2216D	S19-2217D	S19-2218D
	5	S19-2216F	S19-2217F	S19-2218F
	7,5	S19-2216G	S19-2217G	S19-2218G
	10	S19-2216H	S19-2217H	S19-2218H
	15	S19-2216J	S19-2217J	
750	2,5	S19-2316D	S19-2317D	S19-2318D
	5	S19-2316F	S19-2317F	S19-2318F
	7,5	S19-2316G	S19-2317G	S19-2318G
	10	S19-2316H	S19-2317H	S19-2318H
	15	S19-2316J	S19-2317J	

SASK 31.6

Protection plug-in current transformer



Busbar 1	30 x 10 mm
Busbar 2	20 x 13 mm
Round conductor	23 mm
Transformer width	95 mm
Height	116 mm
Depth	74 mm

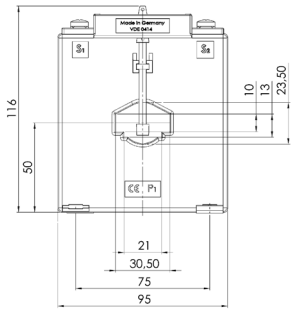

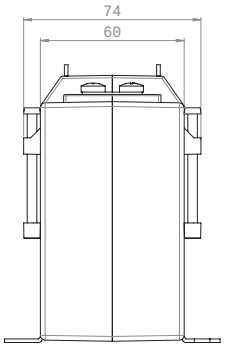

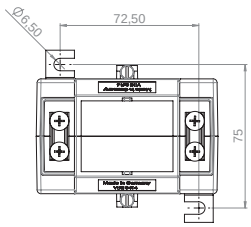

	Secondary current [A] / Class		
Primary current [A]	Burden [VA]	1 A Cl. 10P10 Art.-no.	1 A Cl. 5P15 Art.-no.	1 A Cl. 10P15 Art.-no.
60	1,5	S19-1019C		
80	1,5	S19-1219C		
	2,5	S19-1219D		
100	1,5		S19-131AC	S19-131BC
	2,5	S19-1319D		
150	2,5	S19-1619D	S19-161AD	S19-161BD
	5	S19-1619F		
200	2,5	S19-1719D	S19-171AD	S19-171BD
	5	S19-1719F		
250	2,5	S19-1819D	S19-181AD	S19-181BD
	5	S19-1819F		
300	2,5	S19-1919D	S19-191AD	S19-191BD
	5	S19-1919F		
400	2,5	S19-2019D	S19-201AD	S19-201BD
	5	S19-2019F	S19-201AF	S19-201BF
	7,5	S19-2019G		
	10	S19-2019H		
500	2,5	S19-2119D	S19-211AD	S19-211BD
	5	S19-2119F	S19-211AF	S19-211BF
	7,5	S19-2119G		
	10	S19-2119H		
600	2,5	S19-2219D	S19-221AD	S19-221BD
	5	S19-2219F	S19-221AF	S19-221BF
	7,5	S19-2219G		
	10	S19-2219H		
750	2,5	S19-2319D	S19-231AD	S19-231BD
	5	S19-2319F	S19-231AF	S19-231BF
	7,5	S19-2319G		
	10	S19-2319H		

		Art.-no.
	**Snap-on mounting**	**–**
	**Sealed shutter, type E**	**59044**

SASK 41.4

Protection plug-in current transformer



Busbar 1	40 x 10 mm
Busbar 2	2 x 30 x 5 mm
Round conductor	32 mm
Transformer width	71 mm
Height	85,5 mm
Depth	58 mm

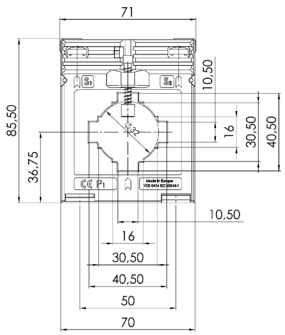

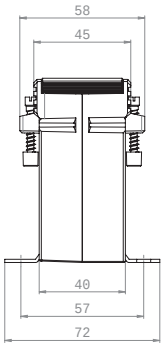

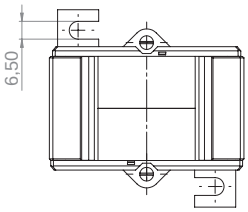

	Secondary current [A] / Class			
Primary current [A]	Burden [VA]	5 A Cl. 5P5 Art.-no.	5 A Cl. 10P5 Art.-no.	1 A Cl. 5P5 Art.-no.	1 A Cl. 10P5 Art.-no.
100	1	S24-1306B	S24-1307B	S24-1316B	S24-1317B
120	1	S24-1406B	S24-1407B	S24-1416B	S24-1417B
125	1	S24-1506B	S24-1507B	S24-1516B	S24-1517B
150	1	S24-1606B	S24-1607B		
	1,5		S24-1607C	S24-1616C	S24-1617C
200	1,5	S24-1706C	S24-1707C	S24-1716C	S24-1717C
250	1,5	S24-1806C	S24-1807C	S24-1816C	S24-1817C
	2,5		S24-1807D	S24-1816D	S24-1817D
300	1,5	S24-1906C	S24-1907C	S24-1916C	S24-1917C
	2,5	S24-1906D	S24-1907D	S24-1916D	S24-1917D
400	1,5	S24-2006C	S24-2007C	S24-2016C	S24-2017C
	2,5	S24-2006D	S24-2007D	S24-2016D	S24-2017D
500	1,5	S24-2106C	S24-2107C	S24-2116C	S24-2117C
	2,5			S24-2116D	S24-2117D
600	1,5	S24-2206C	S24-2207C	S24-2216C	S24-2217C
	2,5			S24-2216D	S24-2217D
750	1,5	S24-2306C	S24-2307C	S24-2316C	S24-2317C
	2,5		S24-2307D	S24-2316D	S24-2317D

		Art.-no.
	**Snap-on mounting, type D**	**55012**
	**Sealed shutter, type B**	**59041**

SASK 541.4

Protection plug-in current transformer



Busbar 1	40 x 10 mm
Busbar 2	2 x 30 x 5 mm
Round conductor	32 mm
Transformer width	86 mm
Height	98,5 mm
Depth	58 mm

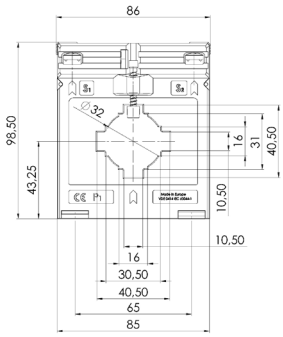

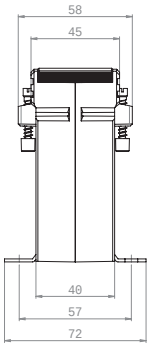

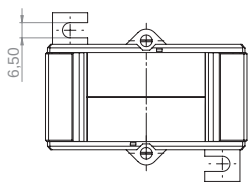

	Secondary current [A] / Class			
Primary current [A] / Burden [VA]	5 A Cl. 5P5 Art.-no.	5 A Cl. 10P5 Art.-no.	5 A Cl. 5P10 Art.-no.	5 A Cl. 10P10 Art.-no.
100 / 1	S33-1306B	S33-1307B		
100 / 1,5	S33-1306C	S33-1307C		
125 / 1	S33-1506B	S33-1507B		
125 / 1,5	S33-1506C	S33-1507C		
125 / 2,5		S33-1507D		
150 / 1,5	S33-1606C	S33-1607C		
150 / 2,5	S33-1606D	S33-1607D		
200 / 1,5	S33-1706C	S33-1707C		
200 / 2,5	S33-1706D	S33-1707D		
250 / 1,5	S33-1806C	S33-1807C		S33-1809C
250 / 2,5	S33-1806D	S33-1807D		
300 / 1,5	S33-1906C	S33-1907C	S33-1908C	S33-1909C
300 / 2,5	S33-1906D	S33-1907D		
300 / 5		S33-1907F		
400 / 1,5	S33-2006C	S33-2007C	S33-2008C	S33-2009C
400 / 2,5	S33-2006D	S33-2007D		
400 / 5	S33-2006F	S33-2007F		
500 / 1,5	S33-2106C	S33-2107C	S33-2108C	S33-2109C
500 / 2,5	S33-2106D	S33-2107D	S33-2108D	S33-2109D
500 / 5	S33-2106F	S33-2107F		
500 / 7,5		S33-2107G		
600 / 1,5	S33-2206C	S33-2207C	S33-2208C	S33-2209C
600 / 2,5	S33-2206D	S33-2207D	S33-2208D	S33-2209D
600 / 5	S33-2206F	S33-2207F		
600 / 7,5		S33-2207G		
750 / 2,5	S33-2306D	S33-2307D	S33-2308D	S33-2309D
750 / 5	S33-2306F	S33-2307F		
750 / 7,5	S33-2306G	S33-2307G		
750 / 10	S33-2306H	S33-2307H		
1000 / 2,5	S33-2506D	S33-2507D	S33-2508D	S33-2509D
1000 / 5	S33-2506F	S33-2507F		
1000 / 7,5	S33-2506G	S33-2507G		
1000 / 10	S33-2506H	S33-2507H		

		Art.-no.
	**Snap-on mounting**	**–**
	**Sealed shutter, type C**	**59042**

SASK 541.4

Protection plug-in current transformer



Busbar 1	40 x 10 mm
Busbar 2	2 x 30 x 5 mm
Round conductor	32 mm
Transformer width	86 mm
Height	98,5 mm
Depth	58 mm

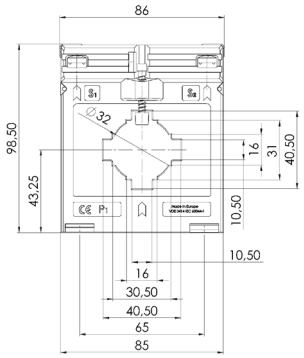

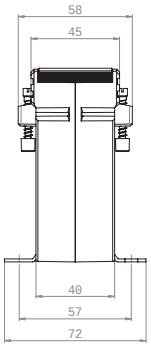

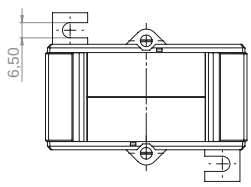

	Secondary current [A] / Class			
Primary current [A] / Burden [VA]	1 A Cl. 5P5 Art.-no.	1 A Cl. 10P5 Art.-no.	1 A Cl. 5P10 Art.-no.	1 A Cl. 10P10 Art.-no.
100 / 1	S33-1316B	S33-1317B		
100 / 1,5	S33-1316C	S33-1317C		
125 / 1	S33-1516B	S33-1517B		
125 / 1,5	S33-1516C	S33-1517C		
125 / 2,5	S33-1516D	S33-1517D		
150 / 1,5	S33-1616C	S33-1617C		
150 / 2,5	S33-1616D	S33-1617D		
200 / 1,5	S33-1716C	S33-1717C		
200 / 2,5	S33-1716D	S33-1717D		
250 / 1,5	S33-1816C	S33-1817C	S33-1818C	S33-1819C
250 / 2,5	S33-1816D	S33-1817D		
300 / 1,5	S33-1916C	S33-1917C	S33-1918C	S33-1919C
300 / 2,5	S33-1916D	S33-1917D		
300 / 5		S33-1917F		
400 / 1,5	S33-2016C	S33-2017C	S33-2018C	S33-2019C
400 / 2,5	S33-2016D	S33-2017D		
400 / 5	S33-2016F	S33-2017F		
500 / 1,5	S33-2116C	S33-2117C	S33-2118C	S33-2119C
500 / 2,5	S33-2116D	S33-2117D	S33-2118D	S33-2119D
500 / 5	S33-2116F	S33-2117F		
600 / 1,5	S33-2216C	S33-2217C	S33-2218C	S33-2219C
600 / 2,5	S33-2216D	S33-2217D	S33-2218D	S33-2219D
600 / 5	S33-2216F	S33-2217F		
600 / 7,5		S33-2217G		
750 / 1,5	S33-2316C	S33-2317C	S33-2318C	S33-2319C
750 / 2,5	S33-2316D	S33-2317D	S33-2318D	S33-2319D
750 / 5	S33-2316F	S33-2317F		
750 / 7,5	S33-2316G	S33-2317G		
750 / 10	S33-2316H	S33-2317H		
1000 / 2,5	S33-2516D	S33-2517D	S33-2518D	S33-2519D
1000 / 5	S33-2516F	S33-2517F		S33-2519F
1000 / 7,5	S33-2516G	S33-2517G		
1000 / 10	S33-2516H	S33-2517H		

		Art.-no.
	**Snap-on mounting**	**–**
	**Sealed shutter, type C**	**59042**

SASK 41.6

Protection plug-in current transformer



Busbar 1	40 x 12 mm
Busbar 2	30 x 15 mm
Round conductor	32 mm
Transformer width	95 mm
Height	116 mm
Depth	74 mm

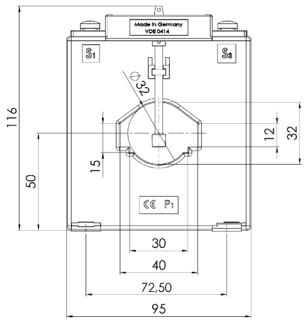

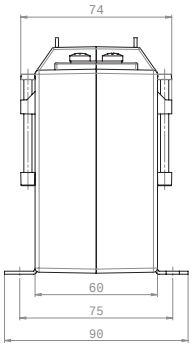

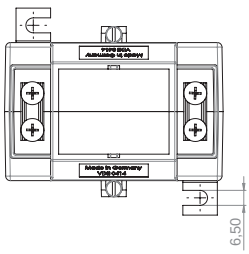

		Secondary current [A] / Class			
Primary current [A]	Burden [VA]	5 A Cl. 5P5 Art.-no.	5 A Cl. 10P5 Art.-no.	5 A Cl. 5P10 Art.-no.	5 A Cl. 10P10 Art.-no.
75	1,5	S30-1106C	S30-1107C	S30-1108C	S30-1109C
	2,5	S30-1106D	S30-1107D		
100	1,5	S30-1306C	S30-1307C	S30-1308C	S30-1309C
	2,5	S30-1306D	S30-1307D	S30-1308D	S30-1309D
	5	S30-1306F	S30-1307F		
150	2,5	S30-1606D	S30-1607D	S30-1608D	S30-1609D
	5	S30-1606F	S30-1607F		
200	2,5	S30-1706D	S30-1707D	S30-1708D	S30-1709D
	5	S30-1706F	S30-1707F		S30-1709F
	7,5	S30-1706G	S30-1707G		
	10	S30-1706H	S30-1707H		
250	2,5	S30-1806D	S30-1807D	S30-1808D	S30-1809D
	5	S30-1806F	S30-1807F	S30-1808F	S30-1809F
	7,5	S30-1806G	S30-1807G		
	10	S30-1806H	S30-1807H		
300	2,5	S30-1906D	S30-1907D	S30-1908D	S30-1909D
	5	S30-1906F	S30-1907F	S30-1908F	S30-1909F
	7,5	S30-1906G	S30-1907G		
	10	S30-1906H	S30-1907H		
	15		S30-1906J		
400	2,5	S30-2006D	S30-2007D	S30-2008D	S30-2009D
	5	S30-2006F	S30-2007F	S30-2008F	S30-2009F
	7,5	S30-2006G	S30-2007G	S30-2008G	S30-2009G
	10	S30-2006H	S30-2007H		
	15	S30-2006J	S30-2007J		
500	2,5	S30-2106D	S30-2107D	S30-2108D	S30-2109D
	5	S30-2106F	S30-2107F	S30-2108F	S30-2109F
	7,5	S30-2106G	S30-2107G	S30-2108G	S30-2109G
	10	S30-2106H	S30-2107H	S30-2108H	S30-2109H
	15	S30-2106J	S30-2107J		
600	2,5	S30-2206D	S30-2207D	S30-2208D	S30-2209D
	5	S30-2206F	S30-2207F	S30-2208F	S30-2209F
	7,5	S30-2206G	S30-2207G	S30-2208G	S30-2209G
	10	S30-2206H	S30-2207H	S30-2208H	S30-2209H
	15	S30-2206J	S30-2207J		
750	2,5	S30-2306D	S30-2307D	S30-2308D	S30-2309D
	5	S30-2306F	S30-2307F	S30-2308F	S30-2309F
	7,5	S30-2306G	S30-2307G	S30-2308G	S30-2309G
	10	S30-2306H	S30-2307H	S30-2308H	S30-2309H
	15	S30-2306J	S30-2307J		

		Art.-no.
	**Snap-on mounting**	**–**
	**Sealed shutter, type E**	**59044**

SASK 41.6

Protection plug-in current transformer



Busbar 1	40 x 12 mm
Busbar 2	30 x 15 mm
Round conductor	32 mm
Transformer width	95 mm
Height	116 mm
Depth	74 mm

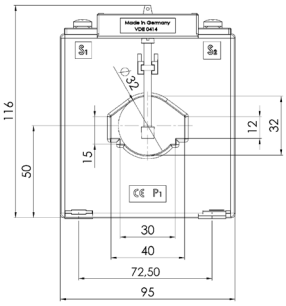

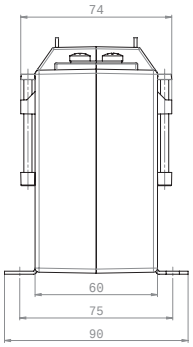

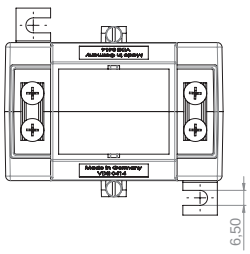

		Secondary current [A] / Class			
Primary current [A]	Burden [VA]	1 A Cl. 5P5 Art.-no.	1 A Cl. 10P5 Art.-no.	1 A Cl. 5P10 Art.-no.	1 A Cl. 10P10 Art.-no.
75	1,5	S30-1116C	S30-1117C	S30-1118C	S30-1119C
	2,5	S30-1116D	S30-1117D		
100	1,5	S30-1316C	S30-1317C	S30-1318C	S30-1319C
	2,5	S30-1316D	S30-1317D	S30-1318D	S30-1319D
	5	S30-1316F	S30-1317F		
150	2,5	S30-1616D	S30-1617D	S30-1618D	S30-1619D
	5	S30-1616F	S30-1617F		
	7,5		S30-1617G		
200	2,5	S30-1716D		S30-1718D	S30-1719D
	5	S30-1716F	S30-1717F		S30-1719F
	7,5	S30-1716G	S30-1717G		
	10	S30-1716H	S30-1717H		
250	2,5	S30-1816D	S30-1817D	S30-1818D	S30-1819D
	5	S30-1816F	S30-1817F	S30-1818F	S30-1819F
	7,5	S30-1816G	S30-1817G		
	10	S30-1816H	S30-1817H		
300	2,5	S30-1916D	S30-1917D	S30-1918D	S30-1919D
	5	S30-1916F	S30-1917F	S30-1918F	S30-1919F
	7,5	S30-1916G	S30-1917G		
	10	S30-1916H	S30-1917H		
	15		S30-1916J		
400	2,5	S30-2016D	S30-2017D	S30-2018D	S30-2019D
	5	S30-2016F	S30-2017F	S30-2018F	S30-2019F
	7,5	S30-2016G	S30-2017G	S30-2018G	S30-2019G
	10	S30-2016H	S30-2017H		
	15	S30-2016J	S30-2017J		
500	2,5	S30-2116D	S30-2117D	S30-2118D	S30-2119D
	5	S30-2116F	S30-2117F	S30-2118F	S30-2119F
	7,5	S30-2116G	S30-2117G	S30-2118G	S30-2119G
	10	S 30-2116H	S30-2117H	S30-2118H	S30-2119H
	15	S30-2116J	S30-2117J		
600	2,5	S30-2216D	S30-2217D	S30-2218D	S30-2219D
	5	S30-2216F	S30-2217F	S30-2218F	S30-2219F
	7,5	S30-2216G	S30-2217G	S30-2218G	S30-2219G
	10	S30-2216H	S30-2217H	S30-2218H	S30-2219H
	15	S30-2216J	S30-2217J		
750	2,5	S30-2316D	S30-2317D	S30-2318D	S30-2319D
	5	S30-2316F	S30-2317F	S30-2318F	S30-2319F
	7,5	S30-2316G	S30-2317G	S30-2318G	S30-2319G
	10	S30-2316H	S30-2317H	S30-2318H	S30-2319H
	15	S30-2316J	S30-2317J		

		Art.-no.
	**Snap-on mounting**	**–**
	**Sealed shutter, type E**	**59044**

SASK 41.10

Protection plug-in current transformer



Busbar 1	40 x 10 mm
Round conductor	32 mm
Transformer width	150 mm
Height	175,5 mm
Depth	114 mm

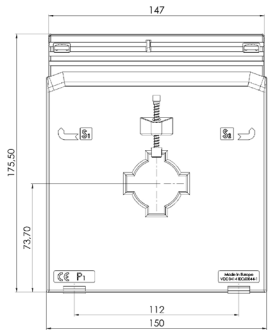

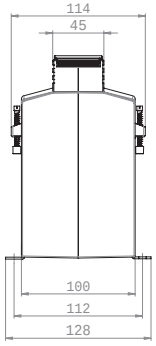

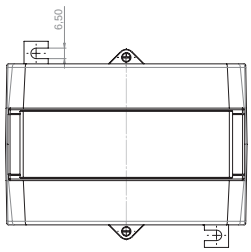

		Secondary current [A] / Class			
Primary current [A]	Burden [VA]	5 A Cl. 5P5 Art.-no.	5 A Cl. 10P5 Art.-no.	5 A Cl. 5P10 Art.-no.	5 A Cl. 10P10 Art.-no.
75	2,5	S31-1106D	S31-1107D		
	5		S31-1107F		
100	5	S31-1306F	S31-1307F	S31-1308F	S31-1309F
	7,5	S31-1306G	S31-1307G		
	10		S31-1307H		
150	5	S31-1606F	S31-1607F	S31-1608F	S31-1609F
	7,5	S31-1606G	S31-1607G	S31-1608G	S31-1609G
	10	S31-1606H	S31-1607H		
	15	S31-1606J	S31-1607J		
200	5	S31-1706F	S31-1707F	S31-1708F	S31-1709F
	7,5	S31-1706G	S31-1707G	S31-1708G	S31-1709G
	10	S31-1706H	S31-1707H	S31-1708H	S31-1709H
	15	S31-1706J	S31-1707J		
250	5	S31-1806F	S31-1807F	S31-1808F	S31-1809F
	7,5	S31-1806G	S31-1807G	S31-1808G	S31-1809G
	10	S31-1806H	S31-1807H	S31-1808H	S31-1809H
	15	S31-1806J	S31-1807J		
300	5	S31-1906F	S31-1907F	S31-1908F	S31-1909F
	7,5	S31-1906G	S31-1907G	S31-1908G	S31-1909G
	10	S31-1906H	S31-1907H	S31-1908H	S31-1909H
	15	S31-1906J	S31-1907J	S31-1908J	S31-1909J
	30	S31-1906L	S31-1907L		
400	5	S31-2006F	S31-2007F	S31-2008F	S31-2009F
	7,5	S31-2006G	S31-2007G	S31-2008G	S31-2009G
	10	S31-2006H	S31-2007H	S31-2008H	S31-2009H
	15	S31-2006J	S31-2007J	S31-2008J	S31-2009J
	30	S31-2006L	S31-2007L		
500	5	S31-2106F	S31-2107F	S31-2108F	S31-2109F
	7,5	S31-2106G	S31-2107G	S31-2108G	S31-2109G
	10	S31-2106H	S31-2107H	S31-2108H	S31-2109H
	15	S31-2106J	S31-2107J	S31-2108J	S31-2109J
	30	S31-2106L	S31-2107L		
600	5	S31-2206F	S31-2207F	S31-2208F	S31-2209F
	7,5	S31-2206G	S31-2207G	S31-2208G	S31-2209G
	10	S31-2206H	S31-2207H	S31-2208H	S31-2209H
	15	S31-2206J	S31-2207J	S31-2208J	S31-2209J
	30	S31-2206L	S31-2207L		
750	5	S31-2306F	S31-2307F	S31-2308F	S31-2309F
	7,5	S31-2306G	S31-2307G	S31-2308G	S31-2309G
	10	S31-2306H	S31-2307H	S31-2308H	S31-2309H
	15	S31-2306J	S31-2307J	S31-2308J	S31-2309J
	30	S31-2306L	S31-2307L		
800	5	S31-2406F	S31-2407F	S31-2408F	S31-2409F
	7,5	S31-2406G	S31-2407G	S31-2408G	S31-2409G
	10	S31-2406H	S31-2407H	S31-2408H	S31-2409H
	15	S31-2406J	S31-2407J	S31-2408J	S31-2409J
	30	S31-2406L	S31-2407L		

SASK 41.10

Protection plug-in current transformer



Busbar 1	40 x 10 mm
Round conductor	32 mm
Transformer width	150 mm
Height	175,5 mm
Depth	114 mm

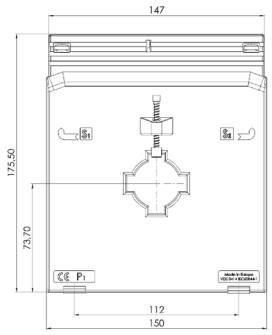

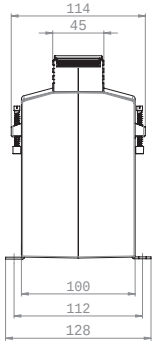

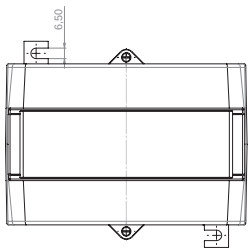

	Secondary current [A] / Class			
Primary current [A]	Burden [VA]	5 A Cl. 5P15 Art.-no.	5 A Cl. 10P15 Art.-no.	5 A Cl. 5P20 Art.-no.	5 A Cl. 10P20 Art.-no.
100	2,5	S31-130AD	S31-130BD		
150	2,5	S31-160AD	S31-160BD	S31-160CD	S31-160DD
	5	S31-160AF	S31-160BF		
200	5	S31-170AF	S31-170BF	S31-170CF	S31-170DF
250	5	S31-180AF	S31-180BF	S31-180CF	S31-180DF
300	5	S31-190AF	S31-190BF	S31-190CF	S31-190DF
	7,5	S31-190AG	S31-190BG		
	10	S31-190AH	S31-190BH		
400	5	S31-200AF	S31-200BF	S31-200CF	S31-200DF
	7,5	S31-200AG	S31-200BG	S31-200CG	S31-200DG
	10	S31-200AH	S31-200BH	S31-200CH	S31-200DH
500	5	S31-210AF	S31-210BF	S31-210CF	S31-210DF
	7,5	S31-210AG	S31-210BG	S31-210CG	S31-210DG
	10	S31-210AH	S31-210BH	S31-210CH	S31-210DH
	15	S31-210AJ	S31-210BJ		
600	5	S31-220AF	S31-220BF	S31-220CF	S31-220DF
	7,5	S31-220AG	S31-220BG	S31-220CG	S31-220DG
	10	S31-220AH	S31-220BH	S31-220CH	S31-220DH
	15	S31-220AJ	S31-220BJ		
750	5	S31-230AF	S31-230BF	S31-230CF	S31-230DF
	7,5	S31-230AG	S31-230BG	S31-230CG	S31-230DG
	10	S31-230AH	S31-230BH	S31-230CH	S31-230DH
	15	S31-230AJ	S31-230BJ		
800	5	S31-240AF	S31-240BF	S31-240CF	S31-240DF
	7,5	S31-240AG	S31-240BG	S31-240CG	S31-240DG
	10	S31-240AH	S31-240BH	S31-240CH	S31-240DH
	15	S31-240AJ	S31-240BJ		

		Art.-no.
	**Snap-on mounting**	–
	**Sealed shutter**	–

SASK 41.10

Protection plug-in current transformer



Busbar 1	40 x 10 mm
Round conductor	32 mm
Transformer width	150 mm
Height	175,5 mm
Depth	114 mm

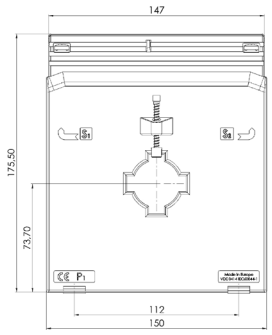

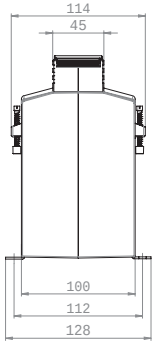

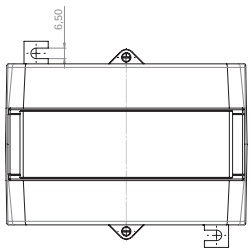

		Secondary current [A] / Class			
Primary current [A]	Burden [VA]	1 A Cl. 5P5 Art.-no.	1 A Cl. 10P5 Art.-no.	1 A Cl. 5P10 Art.-no.	1 A Cl. 10P10 Art.-no.
75	2,5	S31-1116D	S31-1117D		
	5		S31-1117F		
100	5	S31-1316F	S31-1317F	S31-1318F	S31-1319F
	7,5	S31-1316G	S31-1317G		
	10	S31-1316H	S31-1317H		
150	5	S31-1616F	S31-1617F	S31-1618F	S31-1619F
	7,5	S31-1616G	S31-1617G	S31-1618G	S31-1619G
	10	S31-1616H	S31-1617H		
	15	S31-1616J	S31-1617J		
200	5	S31-1716F	S31-1717F	S31-1718F	S31-1719F
	7,5	S31-1716G	S31-1717G	S31-1718G	S31-1719G
	10	S31-1716H	S31-1717H	S31-1718H	S31-1719H
	15	S31-1716J	S31-1717J		
250	5	S31-1816F	S31-1817F	S31-1818F	S31-1819F
	7,5	S31-1816G	S31-1817G	S31-1818G	S31-1819G
	10	S31-1816H	S31-1817H	S31-1818H	S31-1819H
	15	S31-1816J	S31-1817J		
300	5	S31-1916F	S31-1917F	S31-1918F	S31-1919F
	7,5	S31-1916G	S31-1917G	S31-1918G	S31-1919G
	10	S31-1916H	S31-1917H	S31-1918H	S31-1919H
	15	S31-1916J	S31-1917J	S31-1918J	S31-1919J
	30	S31-1916L	S31-1917L		
400	5	S31-2016F	S31-2017F	S31-2018F	S31-2019F
	7,5	S31-2016G	S31-2017G	S31-2018G	S31-2019G
	10	S31-2016H	S31-2017H	S31-2018H	S31-2019H
	15	S31-2016J	S31-2017J	S31-2018J	S31-2019J
	30	S31-2016L	S31-2017L		
500	5	S31-2116F	S31-2117F	S31-2118F	S31-2119F
	7,5	S31-2116G	S31-2117G	S31-2118G	S31-2119G
	10	S31-2116H	S31-2117H	S31-2118H	S31-2119H
	15	S31-2116J	S31-2117J	S31-2118J	S31-2119J
	30	S31-2116L	S31-2117L		
600	5	S31-2216F	S31-2217F	S31-2218F	S31-2219F
	7,5	S31-2216G	S31-2217G	S31-2218G	S31-2219G
	10	S31-2216H	S31-2217H	S31-2218H	S31-2219H
	15	S31-2216J	S31-2217J	S31-2218J	S31-2219J
	30	S31-2216L	S31-2217L		
750	5	S31-2316F	S31-2317F	S31-2318F	S31-2319F
	7,5	S31-2316G	S31-2317G	S31-2318G	S31-2319G
	10	S31-2316H	S31-2317H	S31-2318H	S31-2319H
	15	S31-2316J	S31-2317J	S31-2318J	S31-2319J
	30	S31-2316L	S31-2317L		
800	5	S31-2416F	S31-2417F	S31-2418F	S31-2419F
	7,5	S31-2416G	S31-2417G	S31-2418G	S31-2419G
	10	S31-2416H	S31-2417H	S31-2418H	S31-2419H
	15	S31-2416J	S31-2417J	S31-2418J	S31-2419J
	30	S31-2416L	S31-2417L		

SASK 41.10

Protection plug-in current transformer



Busbar 1	40 x 10 mm
Round conductor	32 mm
Transformer width	150 mm
Height	175,5 mm
Depth	114 mm

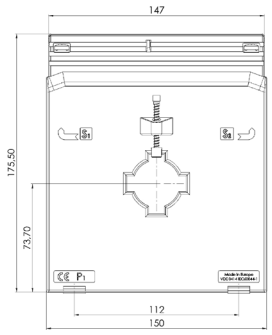

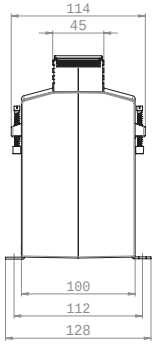

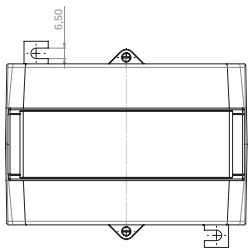

	Secondary current [A] / Class			
Primary current [A]	Burden [VA]	1 A Cl. 5P15 Art.-no.	1 A Cl. 10P15 Art.-no.	1 A Cl. 5P20 Art.-no.	1 A Cl. 10P20 Art.-no.
100	2,5	S31-131AD	S31-131BD		
150	2,5	S31-161AD	S31-161BD	S31-161CD	S31-161DD
	5	S31-161AF	S31-161BF		
200	5	S31-171AF	S31-171BF	S31-171CF	S31-171DF
250	5	S31-181AF	S31-181BF	S31-181CF	S31-181DF
300	5	S31-191AF	S31-191BF	S31-191CF	S31-191DF
	7,5	S31-191AG	S31-191BG		
	10	S31-191AH	S31-191BH		
400	5	S31-201AF	S31-201BF	S31-201CF	S31-201DF
	7,5	S31-201AG	S31-201BG	S31-201CG	S31-201DG
	10	S31-201AH	S31-201BH	S31-201CH	S31-201DH
500	5	S31-211AF	S31-211BF	S31-211CF	S31-211DF
	7,5	S31-211AG	S31-211BG	S31-211CG	S31-211DG
	10	S31-211AH	S31-211BH	S31-211CH	S31-211DH
	15	S31-211AJ	S31-211BJ		
600	5	S31-221AF	S31-221BF	S31-221CF	S31-221DF
	7,5	S31-221AG	S31-221BG	S31-221CG	S31-221DG
	10	S31-221AH	S31-221BH	S31-221CH	S31-221DH
	15	S31-221AJ	S31-221BJ		
750	5	S31-231AF	S31-231BF	S31-231CF	S31-231DF
	7,5	S31-231AG	S31-231BG	S31-231CG	S31-231DG
	10	S31-231AH	S31-231BH	S31-231CH	S31-231DH
	15	S31-231AJ	S31-231BJ		
800	5	S31-241AF	S31-241BF	S31-241CF	S31-241DF
	7,5	S31-241AG	S31-241BG	S31-241CG	S31-241DG
	10	S31-241AH	S31-241BH	S31-241CH	S31-241DH
	15	S31-241AJ	S31-241BJ		

		Art.-no.
	**Snap-on mounting**	–
	**Sealed shutter**	–

SASK 51.4

Protection plug-in current transformer



Busbar 1	50 x 12 mm
Busbar 2	2 x 40 x 10 mm
Round conductor	44 mm
Transformer width	86 mm
Height	98,5 mm
Depth	58 mm

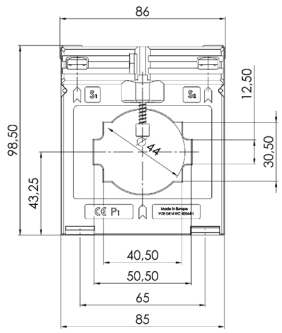

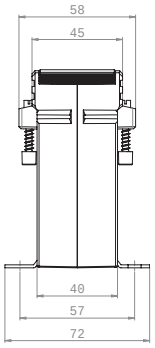

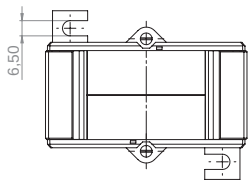

	Secondary current [A] / Class			
Primary current [A]	Burden [VA]	5 A Cl. 5P5 Art.-no.	5 A Cl. 10P5 Art.-no.	1 A Cl. 5P5 Art.-no.	1 A Cl. 10P5 Art.-no.
150	1			S34-1616B	S34-1617B
200	1	S34-1706B	S34-1707B	S34-1716B	S34-1717B
	1,5		S34-1707C	S34-1716C	S34-1717C
250	1,5	S34-1806C	S34-1807C	S34-1816C	S34-1817C
	2,5				S34-1817D
300	1,5	S34-1906C	S34-1907C	S34-1916C	S34-1917C
	2,5			S34-1916D	S34-1917D
400	1,5	S34-2006C	S34-2007C	S34-2016C	S34-2017C
	2,5		S34-2007D	S34-2016D	S34-2017D
500	1,5	S34-2106C	S34-2107C	S34-2116C	S34-2117C
	2,5		S34-2107D	S34-2116D	S34-2117D
600	1,5	S34-2206C	S34-2207C	S34-2216C	S34-2217C
	2,5		S34-2207D	S34-2216D	S34-2217D
750	1,5	S34-2306C	S34-2307C	S34-2316C	S34-2317C
	2,5	S34-2306D	S34-2307D	S34-2316D	S34-2317D
1000	1,5	S34-2506C	S34-2507C	S34-2516C	S34-2517C
	2,5	S34-2506D	S34-2507D	S34-2516D	S34-2517D

		Art.-no.
	**Snap-on mounting**	**–**
	**Sealed shutter, type C**	**59042**

SASK 51.6

Protection plug-in current transformer



Busbar 1	50 x 12 mm
Busbar 2	40 x 30 mm
Round conductor	40 mm
Transformer width	95 mm
Height	116 mm
Depth	74 mm

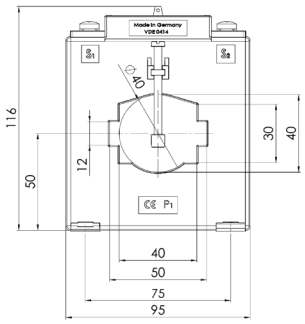

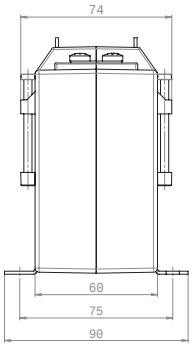

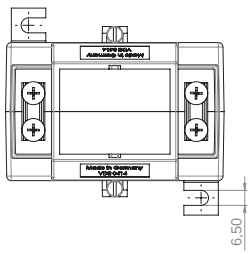

		Secondary current [A] / Class			
Primary current [A]	Burden [VA]	5 A Cl. 5P5 Art.-no.	5 A Cl. 10P5 Art.-no.	5 A Cl. 5P10 Art.-no.	5 A Cl. 10P10 Art.-no.
150	1,5	S37-1606C	S37-1607C	S37-1608C	S37-1609C
	2,5	S37-1606D	S37-1607D		S37-1609D
	5	S37-1606F	S37-1607F		
200	1,5	S37-1706C	S37-1707C	S37-1708C	S37-1709C
	2,5	S37-1706D	S37-1707D	S37-1708D	S37-1709D
	5	S37-1706F	S37-1707F		
250	2,5	S37-1806D	S37-1807D	S37-1808D	S37-1809D
	5	S37-1806F	S37-1807F		
	7,5		S37-1807G		
300	2,5	S37-1906D	S37-1907D	S37-1908D	S37-1909D
	5	S37-1906F	S37-1907F		
	7,5	S37-1906G	S37-1907G		
	10		S37-1907H		
400	2,5	S37-2006D	S37-2007D	S37-2008D	S37-2009D
	5	S37-2006F	S37-2007F	S37-2008F	S37-2009F
	7,5	S37-2006G	S37-2007G		
	10	S37-2006H	S37-2007H		
500	2,5	S37-2106D	S37-2107D	S37-2108D	S37-2109D
	5	S37-2106F	S37-2107F	S37-2108F	S37-2109F
	7,5	S37-2106G	S37-2107G		
	10	S37-2106H	S37-2107H		
	15		S37-2107J		
600	2,5	S37-2206D	S37-2207D	S37-2208D	S37-2209D
	5	S37-2206F	S37-2207F	S37-2208F	S37-2209F
	7,5	S37-2206G	S37-2207G		
	10	S37-2206H	S37-2207H		
	15	S37-2206J	S37-2207J		
750	2,5	S37-2306D	S37-2307D	S37-2308D	S37-2309D
	5	S37-2306F	S37-2307F	S37-2308F	S37-2309F
	7,5	S37-2306G	S37-2307G	S37-2308G	S37-2309G
	10	S37-2306H	S37-2307H		
	15	S37-2306J	S37-2307J		
1000	2,5	S37-2506D	S37-2507D	S37-2508D	S37-2509D
	5	S37-2506F	S37-2507F	S37-2508F	S37-2509F
	7,5	S37-2506G	S37-2507G	S37-2508G	S37-2509G
	10	S37-2506H	S37-2507H		
	15	S37-2506J	S37-2507J		

		Art.-no.
	**Snap-on mounting**	**–**
	**Sealed shutter, type E**	**59044**

SASK 51.6

Protection plug-in current transformer



Busbar 1	50 x 12 mm
Busbar 2	40 x 30 mm
Round conductor	40 mm
Transformer width	95 mm
Height	116 mm
Depth	74 mm

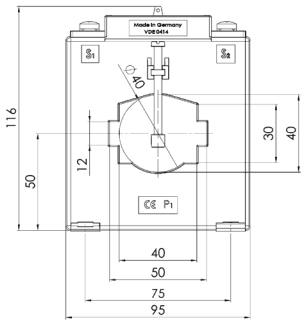

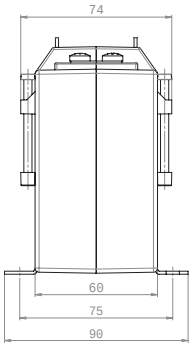

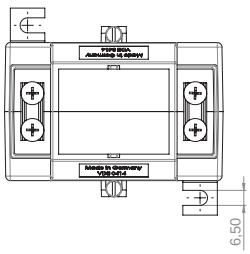

		Secondary current [A] / Class			
Primary current [A]	Burden [VA]	1 A Cl. 5P5 Art.-no.	1 A Cl. 10P5 Art.-no.	1 A Cl. 5P10 Art.-no.	1 A Cl. 10P10 Art.-no.
150	1,5	S37-1616C	S37-1617C	S37-1618C	S37-1619C
	2,5	S37-1616D	S37-1617D		S37-1619D
	5	S37-1616F	S37-1617F		
200	1,5	S37-1716C	S37-1717C	S37-1718C	S37-1719C
	2,5	S37-1716D	S37-1717D	S37-1718D	S37-1719D
	5	S37-1716F	S37-1717F		
250	2,5	S37-1816D	S37-1817D	S37-1818D	S37-1819D
	5	S37-1816F	S37-1817F		
	7,5		S37-1817G		
300	2,5	S37-1916D	S37-1917D	S37-1918D	S37-1919D
	5	S37-1916F	S37-1917F		
	7,5		S37-1917G		
	10		S37-1917H		
400	2,5	S37-2016D	S37-2017D	S37-2018D	S37-2019D
	5	S37-2016F	S37-2017F	S37-2018F	S37-2019F
	7,5	S37-2016G	S37-2017G		
	10	S37-2016H	S37-2017H		
500	2,5	S37-2116D	S37-2117D	S37-2118D	S37-2119D
	5	S37-2116F	S37-2117F	S37-2118F	S37-2119F
	7,5	S37-2116G	S37-2117G		
	10	S37-2116H	S37-2117H		
	15		S37-2117J		
600	2,5	S37-2216D	S37-2217D	S37-2218D	S37-2219D
	5	S37-2216F	S37-2217F	S37-2218F	S37-2219F
	7,5	S37-2216G	S37-2217G		
	10	S37-2216H	S37-2217H		
	15	S37-2216J	S37-2217J		
750	2,5	S37-2316D	S37-2317D	S37-2318D	S37-2319D
	5	S37-2316F	S37-2317F	S37-2318F	S37-2319F
	7,5	S37-2316G	S37-2317G		
	10	S37-2316H	S37-2317H		
	15	S37-2316J	S37-2317J		
1000	2,5	S37-2516D	S37-2517D	S37-2518D	S37-2519D
	5	S37-2516F	S37-2517F	S37-2518F	S37-2519F
	7,5	S37-2516G	S37-2517G	S37-2518G	S37-2519G
	10	S37-2516H	S37-2517H		
	15	S37-2516J	S37-2517J		

		Art.-no.
	**Snap-on mounting**	**–**
	**Sealed shutter, type E**	**59044**

SASK 61.4

Protection plug-in current transformer



Busbar 1	60 x 10 mm
Busbar 2	2 x 50 x 10 mm
Round conductor	44 mm
Transformer width	96 mm
Height	105,5 mm
Depth	58 mm

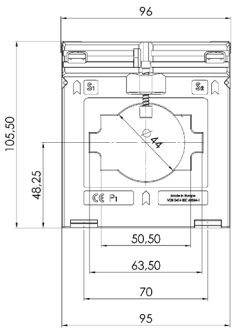

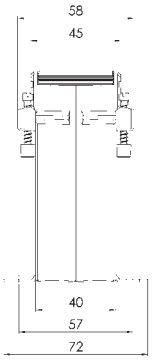

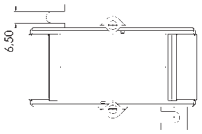

	Secondary current [A] / Class			
Primary current [A]	Burden [VA]	5 A Cl. 5P5 Art.-no.	5 A Cl. 10P5 Art.-no.	1 A Cl. 5P5 Art.-no.	1 A Cl. 10P5 Art.-no.
200	1	S41-1706B	S41-1707B	S41-1716B	S41-1717B
	1,5	S41-1706C	S41-1707C	S41-1716C	S41-1717C
250	1	S41-1806B	S41-1807B	S41-1816B	S41-1817B
	1,5	S41-1806C	S41-1807C	S41-1816C	S41-1817C
300	1,5	S41-1906C	S41-1907C	S41-1916C	S41-1917C
	2,5		S41-1907D	S41-1916D	S41-1917D
400	1,5	S41-2006C	S41-2007C	S41-2016C	S41-2017C
	2,5	S41-2006D	S41-2007D	S41-2016D	S41-2017D
500	1,5	S41-2106C	S41-2107C	S41-2116C	S41-2117C
	2,5	S41-2106D	S41-2107D	S41-2116D	S41-2117D
600	1,5	S41-2206C	S41-2207C	S41-2216C	S41-2217C
	2,5	S41-2206D	S41-2207D	S41-2216D	S41-2217D
	5			S41-2216F	S41-2217F
750	1,5	S41-2306C	S41-2307C	S41-2316C	S41-2317C
	2,5	S41-2306D	S41-2307D	S41-2316D	S41-2317D
	5	S41-2307F		S41-2316F	S41-2317F
1000	1,5	S41-2506C	S41-2507C	S41-2516C	S41-2517C
	2,5	S41-2506D	S41-2507D	S41-2516D	S41-2517D
	5	S41-2506F	S41-2507F	S41-2516F	S41-2517F
1200	1,5	S41-2606C	S41-2607C	S41-2616C	S41-2617C
	2,5	S41-2606D	S41-2607D	S41-2616D	S41-2617D
	5	S41-2606F	S41-2607F	S41-2616F	S41-2617F
1250	1,5	S41-2706C	S41-2707C	S41-2716C	S41-2717C
	2,5	S41-2706D	S41-2707D	S41-2716D	S41-2717D
	5	S41-2706F	S41-2707F	S41-2716F	S41-2717F

		Art.-no.
	**Snap-on mounting**	**–**
	**Sealed shutter, type C**	**59042**

SASK 61.10

Protection plug-in current transformer



Busbar 1	60 x 10 mm
Busbar 2	50 x 30 mm
Transformer width	150 mm
Height	175,5 mm
Depth	114 mm

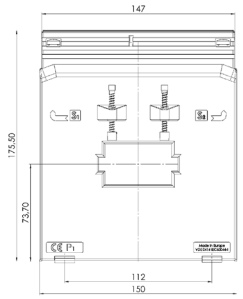

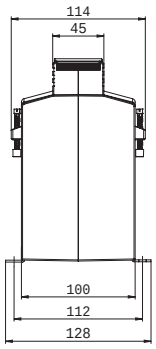

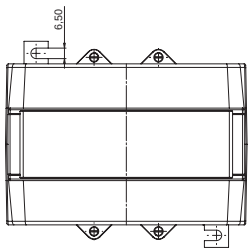

		Secondary current [A] / Class			
Primary current [A]	Burden [VA]	5 A Cl. 5P5 Art.-no.	5 A Cl. 10P5 Art.-no.	5 A Cl. 5P10 Art.-no.	5 A Cl. 10P10 Art.-no.
100	2,5	S50-1306D	S50-1307D	S50-1308D	S50-1309D
	5	S50-1306F	S50-1307F		
150	5	S50-1606F	S50-1607F	S50-1608F	S50-1609F
	7,5	S50-1606G	S50-1607G		
	10	S50-1606H	S50-1607H		
200	5	S50-1706F	S50-1707F	S50-1708F	S50-1709F
	7,5	S50-1706G	S50-1707G		
	10	S50-1706H	S50-1707H		
	15	S50-1706J	S50-1707J		
250	5	S50-1806F	S50-1807F	S50-1808F	S50-1809F
	7,5	S50-1806G	S50-1807G		S50-1809G
	10	S50-1806H	S50-1807H	S50-1908H	S50-1809H
	15	S50-1806J	S50-1807J		
300	5	S50-1906F	S50-1907F	S50-1908F	S50-1909F
	7,5	S50-1906G	S50-1907G	S50-1908G	S50-1909G
	10	S50-1906H	S50-1907H		S50-1909H
	15	S50-1906J	S50-1907J		
400	5	S50-2006F	S50-2007F	S50-2008F	S50-2009F
	7,5	S50-2006G	S50-2007G	S50-2008G	S50-2009G
	10	S50-2006H	S50-2007H	S50-2008H	S50-2009H
	15	S50-2006J	S50-2007J		S50-2009J
500	5	S50-2106F	S50-2107F	S50-2108F	S50-2109F
	7,5	S50-2106G	S50-2107G	S50-2108G	S50-2109G
	10	S50-2106H	S50-2107H	S50-2108H	S50-2109H
	15	S50-2106J	S50-2107J	S50-2108J	S50-2109J
600	5	S50-2206F	S50-2207F	S50-2208F	S50-2209F
	7,5	S50-2206G	S50-2207G	S50-2208G	S50-2209G
	10	S50-2206H	S50-2207H	S50-2208H	S50-2209H
	15	S50-2206J	S50-2207J	S50-2208J	S50-2209J
750	5	S50-2306F	S50-2307F	S50-2308F	S50-2309F
	7,5	S50-2306G	S50-2307G	S50-2308G	S50-2309G
	10	S50-2306H	S50-2307H	S50-2308H	S50-2309H
	15	S50-2306J	S50-2307J	S50-2308J	S50-2309J
1000	5	S50-2506F	S50-2507F	S50-2508F	S50-2509F
	7,5	S50-2506G	S50-2507G	S50-2508G	S50-2509G
	10	S50-2506H	S50-2507H	S50-2508H	S50-2509H
	15	S50-2506J	S50-2507J	S50-2508J	S50-2509J
1200	5	S50-2606F	S50-2607F	S50-2608F	S50-2609F
	7,5	S50-2606G	S50-2607G	S50-2608G	S50-2609G
	10	S50-2606H	S50-2607H	S50-2608H	S50-2609H
	15	S50-2606J	S50-2607J	S50-2608J	S50-2609J
1250	5	S50-2706F	S50-2707F	S50-2708F	S50-2709F
	7,5	S50-2706G	S50-2707G	S50-2708G	S50-2709G
	10	S50-2706H	S50-2707H	S50-2708H	S50-2709H
	15	S50-2706J	S50-2707J	S50-2708J	S50-2709J
1500	5	S50-2806F	S50-2807F	S50-2808F	S50-2809F
	7,5	S50-2806G	S50-2807G	S50-2808G	S50-2809G
	10	S50-2806H	S50-2807H	S50-2808H	S50-2809H
	15	S50-2806J	S50-2807J	S50-2808J	S50-2809J

SASK 61.10

Protection plug-in current transformer



Busbar 1	60 x 10 mm
Busbar 2	50 x 30 mm
Transformer width	150 mm
Height	175,5 mm
Depth	114 mm

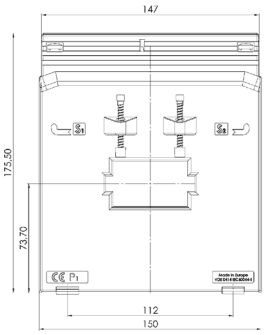

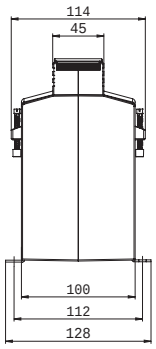

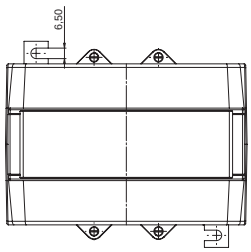

	Secondary current [A] / Class			
Primary current [A]	Burden [VA]	5 A Cl. 5P15 Art.-no.	5 A Cl. 10P15 Art.-no.	5 A Cl. 5P20 Art.-no.	5 A Cl. 10P20 Art.-no.
150	2,5	S50-160AD	S50-160BD		
200	2,5	S50-170AD	S50-170BD	S50-170CD	S50-170DD
250	2,5	S50-180AD	S50-180BD	S50-180CD	S50-180DD
	5	S50-180AF	S50-180BF		
300	2,5	S50-190AD	S50-190BD	S50-190CD	S50-190DD
	5	S50-190AF	S50-190BF		S50-190DF
400	5	S50-200AF	S50-200BF	S50-200CF	S50-200DF
500	5	S50-210AF	S50-210BF	S50-210CF	S50-210DF
	7,5	S50-210AG	S50-210BG		
	10	S50-210AH	S50-210BH		
600	5	S50-220AF	S50-220BF	S50-220CF	S50-220DF
	7,5	S50-220AG	S50-220BG		
	10	S50-220AH	S50-220BH		
750	5	S50-230AF	S50-230BF	S50-230CF	S50-230DF
	7,5	S50-230AG	S50-230BG		
	10	S50-230AH	S50-230BH		
1000	5	S50-250AF	S50-250BF	S50-250CF	S50-250DF
	7,5	S50-250AG	S50-250BG		
	10	S50-250AH	S50-250BH		
1200	5	S50-260AF	S50-260BF	S50-260CF	S50-260DF
	7,5	S50-260AG	S50-260BG		
	10	S50-260AH	S50-260BH		
1250	5	S50-270AF	S50-270BF	S50-270CF	S50-270DF
	7,5	S50-270AG	S50-270BG		
	10	S50-270AH	S50-270BH		S50-271CH
1500	5	S50-280AF	S50-280BF	S50-280CF	S50-280DF
	7,5	S50-280AG	S50-280BG		
	10	S50-280AH	S50-280BH		
	15		S50-280BJ		

		Art.-no.
	**Snap-on mounting**	–
	**Sealed shutter**	–

SASK 61.10

Protection plug-in current transformer



Busbar 1	60 x 10 mm
Busbar 2	50 x 30 mm
Transformer width	150 mm
Height	175,5 mm
Depth	114 mm

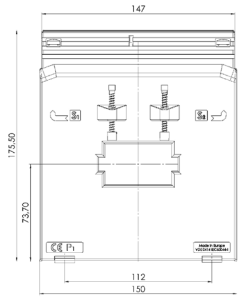

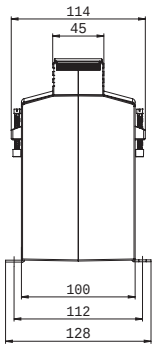

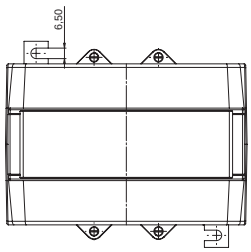

		Secondary current [A] / Class			
Primary current [A]	Burden [VA]	1 A Cl. 5P5 Art.-no.	1 A Cl. 10P5 Art.-no.	1 A Cl. 5P10 Art.-no.	1 A Cl. 10P10 Art.-no.
100	2,5	S50-1316D	S50-1317D	S50-1318D	S50-1319D
	5	S50-1316F	S50-1317F		
150	5	S50-1616F	S50-1617F	S50-1618F	S50-1619F
	7,5	S50-1616G	S50-1617G		
	10	S50-1616H	S50-1617H		
200	5	S50-1716F	S50-1717F	S50-1718F	S50-1719F
	7,5	S50-1716G	S50-1717G		
	10	S50-1716H	S50-1717H		
	15	S50-1716J	S50-1717J		
250	5	S50-1816F	S50-1817F	S50-1818F	S50-1819F
	7,5	S50-1816G	S50-1817G		S50-1819G
	10	S50-1816H	S50-1817H	S50-1918H	S50-1819H
	15	S50-1816J	S50-1817J		
300	5	S50-1916F	S50-1917F	S50-1918F	S50-1919F
	7,5	S50-1916G	S50-1917G	S50-1918G	S50-1919G
	10	S50-1916H	S50-1917H		S50-1919H
	15	S50-1916J	S50-1917J		
400	5	S50-2016F	S50-2017F	S50-2018F	S50-2019F
	7,5	S50-2016G	S50-2017G	S50-2018G	S50-2019G
	10	S50-2016H	S50-2017H	S50-2018H	S50-2019H
	15	S50-2016J	S50-2017J		S50-2019J
500	5	S50-2116F	S50-2117F	S50-2118F	S50-2119F
	7,5	S50-2116G	S50-2117G	S50-2118G	S50-2119G
	10	S50-2116H	S50-2117H	S50-2118H	S50-2119H
	15	S50-2116J	S50-2117J	S50-2118J	S50-2119J
600	5	S50-2216F	S50-2217F	S50-2218F	S50-2219F
	7,5	S50-2216G	S50-2217G	S50-2218G	S50-2219G
	10	S50-2216H	S50-2217H	S50-2218H	S50-2219H
	15	S50-2216J	S50-2217J	S50-2218J	S50-2219J
750	5	S50-2316F	S50-2317F	S50-2318F	S50-2319F
	7,5	S50-2316G	S50-2317G	S50-2318G	S50-2319G
	10	S50-2316H	S50-2317H	S50-2318H	S50-2319H
	15	S50-2316J	S50-2317J	S50-2318J	S50-2319J
1000	5	S50-2516F	S50-2517F	S50-2518F	S50-2519F
	7,5	S50-2516G	S50-2517G	S50-2518G	S50-2519G
	10	S50-2516H	S50-2517H	S50-2518H	S50-2519H
	15	S50-2516J	S50-2517J	S50-2518J	S50-2519J
1200	5	S50-2616F	S50-2617F	S50-2618F	S50-2619F
	7,5	S50-2616G	S50-2617G	S50-2618G	S50-2619G
	10	S50-2616H	S50-2617H	S50-2618H	S50-2619H
	15	S50-2616J	S50-2617J	S50-2618J	S50-2619J
1250	5	S50-2716F	S50-2717F	S50-2718F	S50-2719F
	7,5	S50-2716G	S50-2717G	S50-2718G	S50-2719G
	10	S50-2716H	S50-2717H	S50-2718H	S50-2719H
	15	S50-2716J	S50-2717J	S50-2718J	S50-2719J
1500	5	S50-2816F	S50-2817F	S50-2818F	S50-2819F
	7,5	S50-2816G	S50-2817G	S50-2818G	S50-2819G
	10	S50-2816H	S50-2817H	S50-2818H	S50-2819H
	15	S50-2816J	S50-2817J	S50-2818J	S50-2819J

SASK 61.10

Protection plug-in current transformer



Busbar 1	60 x 10 mm
Busbar 2	50 x 30 mm
Transformer width	150 mm
Height	175,5 mm
Depth	114 mm

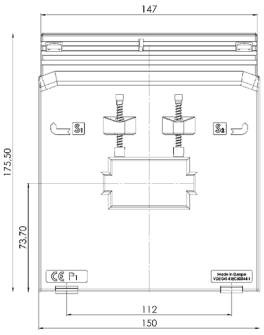

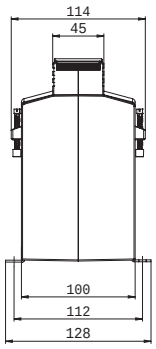

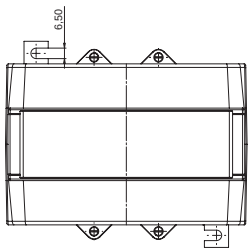

	Secondary current [A] / Class			
Primary current [A]	Burden [VA]	1 A Cl. 5P15 Art.-no.	1 A Cl. 10P15 Art.-no.	1 A Cl. 5P20 Art.-no.	1 A Cl. 10P20 Art.-no.
150	2,5	S50-161AD	S50-161BD		
200	2,5	S50-171AD	S50-171BD	S50-171CD	S50-171DD
250	2,5	S50-181AD	S50-181BD	S50-181CD	S50-181DD
	5	S50-181AF	S50-181BF		
300	2,5	S50-191AD	S50-191BD	S50-191CD	S50-191DD
	5	S50-191AF	S50-191BF		S50-191DF
400	5	S50-201AF	S50-201BF	S50-201CF	S50-201DF
500	5	S50-211AF	S50-211BF	S50-211CF	S50-211DF
	7,5	S50-211AG	S50-211BG		
	10	S50-211AH	S50-211BH		
600	5	S50-221AF	S50-221BF	S50-221CF	S50-221DF
	7,5	S50-221AG	S50-221BG		
	10	S50-221AH	S50-221BH		
750	5	S50-231AF	S50-231BF	S50-231CF	S50-231DF
	7,5	S50-231AG	S50-231BG		
	10	S50-231AH	S50-231BH		
1000	5	S50-251AF	S50-251BF	S50-251CF	S50-251DF
	7,5	S50-251AG	S50-251BG		
	10	S50-251AH	S50-251BH		
1200	5	S50-261AF	S50-261BF	S50-261CF	S50-261DF
	7,5	S50-261AG	S50-261BG		
	10	S50-261AH	S50-261BH		
1250	5	S50-271AF	S50-271BF	S50-271CF	S50-271DF
	7,5	S50-271AG	S50-271BG		
	10	S50-271AH	S50-271BH		
1500	5	S50-281AF	S50-281BF	S50-281CF	S50-281DF
	7,5	S50-281AG	S50-281BG		
	10	S50-281AH	S50-281BH		
	15		S50-281BJ		

		Art.-no.
	**Snap-on mounting**	–
	**Sealed shutter**	–

SASK 63.6

Protection plug-in current transformer



Busbar 1	60 x 30 mm
Round conductor	30 mm
Transformer width	88 mm
Height	129 mm
Depth	78 mm

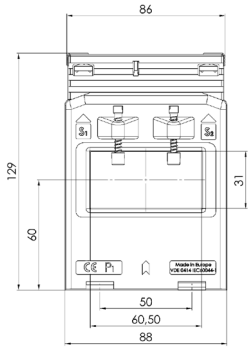

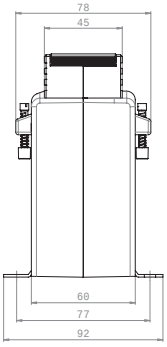

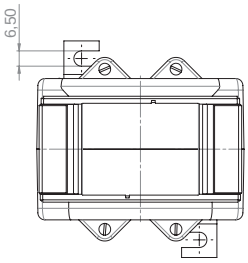

	Secondary current [A] / Class			
Primary current [A]	Burden [VA]	5 A Cl. 5P5 Art.-no.	5 A Cl. 10P5 Art.-no.	1 A Cl. 5P5 Art.-no.	1 A Cl. 10P5 Art.-no.
200	1,5	S46-1706C	S46-1707C	S46-1716C	S46-1717C
	2,5		S46-1707D	S46-1716D	S46-1717D
250	1,5	S46-1806C	S46-1807C	S46-1816C	S46-1817C
	2,5	S46-1806D	S46-1807D	S46-1816D	S46-1817D
300	1,5	S46-1906C	S46-1907C	S46-1916C	S46-1917C
	2,5	S46-1906D	S46-1907D	S46-1916D	S46-1917D
400	2,5	S46-2006D	S46-2007D	S46-2016D	S46-2017D
	5		S46-2007F	S46-2016F	S46-2017F
500	2,5	S46-2106D	S46-2107D	S46-2116D	S46-2117D
	5	S46-2106F	S46-2107F	S46-2116F	S46-2117F
600	2,5	S46-2206D	S46-2207D	S46-2216D	S46-2217D
	5	S46-2206F	S46-2207F	S46-2216F	S46-2217F
750	2,5	S46-2306D	S46-2307D	S46-2316D	S46-2317D
	5	S46-2306F	S46-2307F	S46-2316F	S46-2317F
1000	2,5	S46-2506D	S46-2507D	S46-2516D	S46-2517D
	5	S46-2506F	S46-2507F	S46-2516F	S46-2517F

		Art.-no.
	**Snap-on mounting**	**–**
	**Sealed shutter, type C**	**59042**

SASK 127.6 and SASK 129.10

Protection plug-in current transformer

For more information, please contact us.



Busbar 1	120 x 70 mm
Round conductor	70 mm
Transformer width	205 mm
Height	203 mm
Depth	78 mm



Busbar 1	120 x 90 mm
Round conductor	90 mm
Transformer width	250 mm
Height	247 mm
Depth	118 mm

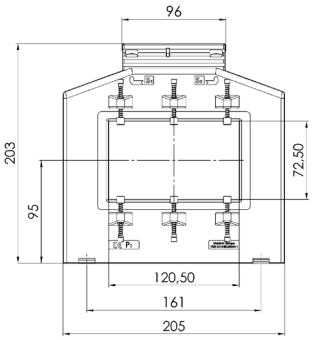

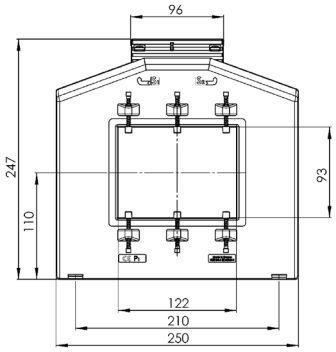

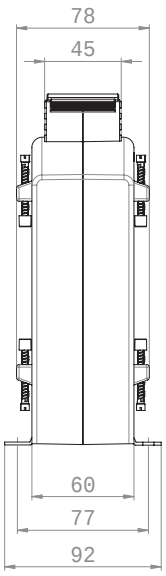

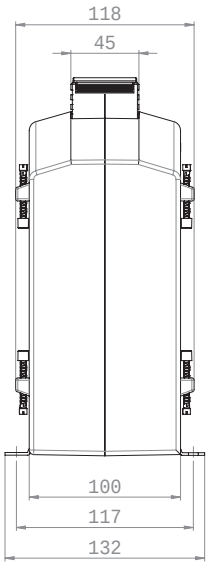

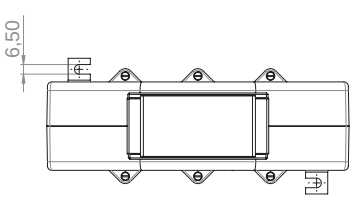

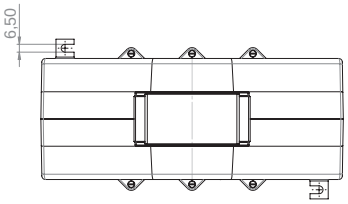

Low-voltage current transformers for industrial applications

Three-phase current transformer set

ASRD 14
Round conductor: 3x 13,5 mm Current range: 3x 50 ... 3x 150 A Page: 182
Transformer width: 105 mm

ASRD 205.37
Busbar 1: 3x 20 x 5 mm Current range: 3x 100 ... 3x 250 A Page: 183
Round conductor: 3x 18 mm
Transformer width: 115 mm

ASRD 205.37, UL-certified
Busbar 1: 3x 20 x 5 mm Current range: 3x 100 ... 3x 250 A Page: 184
Round conductor: 3x 18 mm
Transformer width: 115 mm

ASRD 310.37
Busbar 1: 3x 30 x 10 mm Current range: 3x 250 ... 3x 600 A Page: 185
Round conductor: 3x 22 mm
Transformer width: 150 mm

ASRD 310.37, UL-certified
Busbar 1: 3x 30 x 10 mm Current range: 3x 250 ... 3x 600 A Page: 186
Round conductor: 3x 22 mm
Transformer width: 150 mm

ASRD 14

Three-phase current transformer set



Round conductor	13,5 mm
Transformer width	105 mm
Height	90 mm
Depth	54 mm

Primary current [A]	Burden [VA]	Secondary current [A] / Class			
		5 A Cl. 1 Art.-no.	5 A Cl. 0,5 Art.-no.	1 A Cl. 1 Art.-no.	1 A Cl. 0,5 Art.-no.
3 x 50	1	96030		96230	
3 x 60	1,25	96032		96232	
3 x 75	1,5	96034		96234	
3 x 80	1,5	96036		96236	
3 x 100	2,5	96038		96238	
3 x 125	2,5	96039	96014	96239	96214
3 x 150	2,5	96040	96017	96240	96217
	3,75	96044		96244	

		Art.-no.
	**Snap-on mounting**	–
	**Sealed shutter**	–

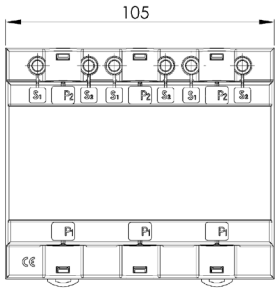

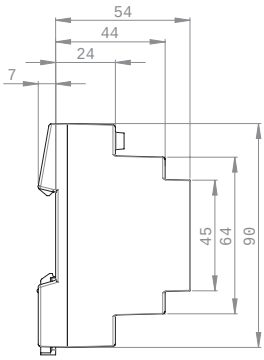

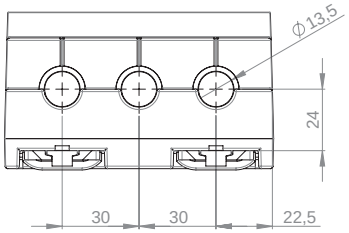

ASRD 205.37

Three-phase current transformer set



Busbar 1	20 x 5 mm
Round conductor	18 mm
Transformer width	115 mm
Height	65 mm
Depth	37 mm

	Secondary current [A] / Class	
Primary current [A] / Burden [VA]	5 A Cl. 1 Art.-no.	1 A Cl. 1 Art.-no.
3 x 100 / 1	D205-010	D205-020
3 x 150 / 1,25	D205-011	D205-021
3 x 160 / 1,5	D205-014	D205-024
3 x 200 / 1,5	D205-012	D205-022
3 x 250 / 2,5	D205-013	D205-023

		Art.-no.
	**Snap-on mounting**	**55022 ***
	**Sealed shutter**	**–**

* 2 fastenings are required to snap onto the DIN rail

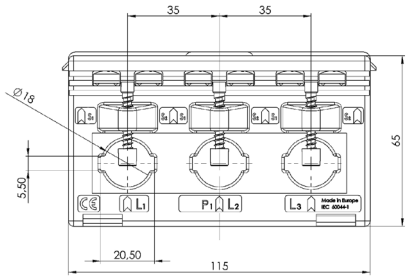



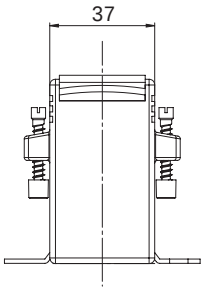

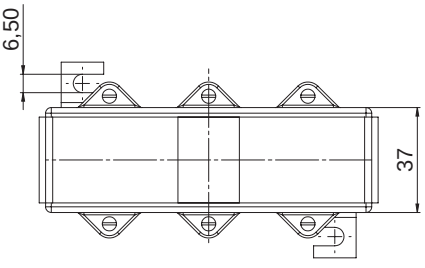

ASRD 205.37

Three-phase current transformer set



		Secondary current [A] / Class	
Primary current [A]	Burden [VA]	5 A Cl. 1 Art.-no.	1 A Cl. 1 Art.-no.
3 x 100	1	D205-010UL	D205-020UL
3 x 150	1,25	D205-011UL	D205-021UL
3 x 160	1,5	D205-014UL	D205-024UL
3 x 200	1,5	D205-012UL	D205-022UL
3 x 250	2,5	D205-013UL	D205-023UL

UL certification; Certificate no.: 20180925-E336996

		Art.-no.
	**Snap-on mounting**	**55022 ***
	**Sealed shutter**	**–**

* 2 fastenings are required to snap onto the DIN rail

Busbar 1	20 x 5 mm
Round conductor	18 mm
Transformer width	115 mm
Height	65 mm
Depth	37 mm

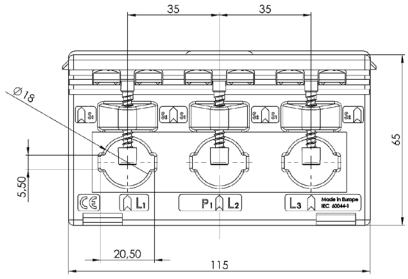



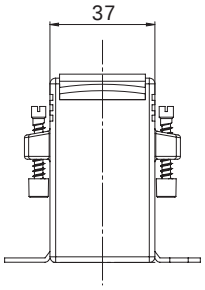

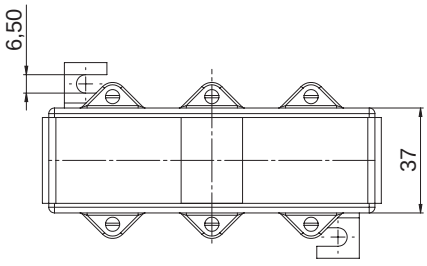

ASRD 310.37

Three-phase current transformer set



Busbar 1	30 x 10 mm
Round conductor	22 mm
Transformer width	150 mm
Height	75 mm
Depth	37 mm

	Secondary current [A] / Class	
Primary current [A] / Burden [VA]	5 A Cl. 1 Art.-no.	1 A Cl. 1 Art.-no.
3 x 250 / 2,5	D310-010	D310-020
3 x 300 / 3,75	D310-011	D310-021
3 x 400 / 5	D310-012	D310-022
3 x 500 / 5	D310-013	D310-023
3 x 600 / 5	D310-014	D310-024

		Art.-no.
	**Snap-on mounting**	**55022 ***
	**Sealed shutter**	**–**

* 2 fastenings are required to snap onto the DIN rail

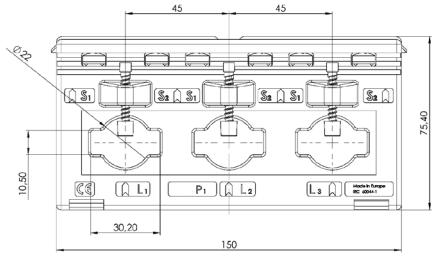



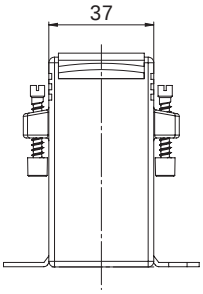

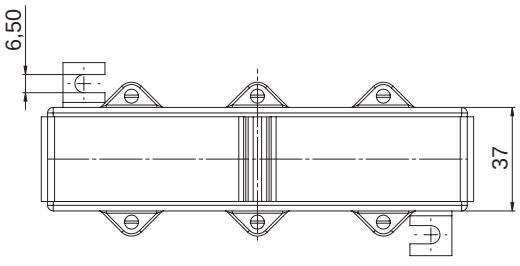

ASRD 310.37

Three-phase current transformer set



		Secondary current [A] / Class	
Primary current [A]	Burden [VA]	5 A Cl. 1 Art.-no.	1 A Cl. 1 Art.-no.
3 x 250	2,5	D310-010UL	D310-020UL
3 x 300	3,75	D310-011UL	D310-021UL
3 x 400	5	D310-012UL	D310-022UL

Busbar 1	30 x 10 mm
Round conductor	22 mm
Transformer width	150 mm
Height	75 mm
Depth	37 mm

UL certification; Certificate no.: 20180925-E336996

		Art.-no.
	**Snap-on mounting**	**55022 ***
	**Sealed shutter**	**–**

* 2 fastenings are required to snap onto the DIN rail

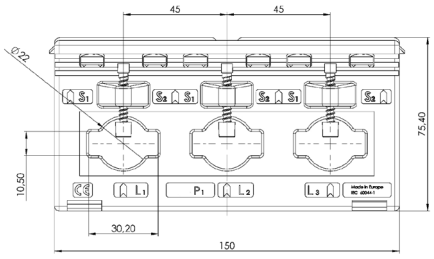



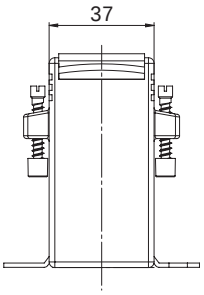

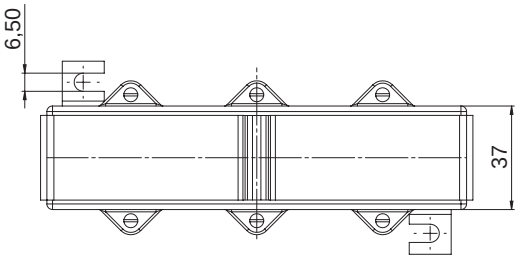

Low-voltage current transformers for tariff applications

Tubular current transformer

EASR 14.3
Round conductor: 14 mm Current range: 75 ... 150 A Page: 188
Transformer width: 45 mm

EASR 22.3
Round conductor: 22,5 mm Current range: 100 ... 600 A Page: 189
Transformer width: 61 mm

Plug-in current transformer for fuse switch disconnectors

EASKL 19.34
InLine II, size 00
Round conductor: 16,4 mm Current range: 80 ... 160 A Page: 190
Transformer width: 45 mm

EASKL 31.34
InLine II, size 123
Round conductor: 18,6 mm Current range: 200 ... 600 A Page: 191
Transformer width: 60 mm

EAS 176.3
SlimLine, size XR1
Round conductor: 15,2 mm Current range: 100 ... 250 A Page: 192
Transformer width: 45 mm

Type „E“ denotes that the current transformers are suitable for tariff applications

EASR 14.3

Tubular current transformer – Tariff applications



Current transformer designed for integrated installation into fuse switch disconnectors, type SlimeLine of size XR00.

Round conductor	14 mm
Transformer width	45 mm
Height	65 mm
Depth	30 mm

		Secondary current [A] / Class				
Primary current [A]	Burden [VA]	5 A Cl. 0,5 Art.-no.	5 A Cl. 0,5s Art.-no.	5 A Cl. 0,2 Art.-no.	1 A Cl. 0,5 Art.-no.	1 A Cl. 0,2 Art.-no.
75	1,5	26584	26590		26770	
80	1,5	26585	26591		26771	
100	1,5	26586	26592	26568	26786	26777
120	1,5	26587	26593	26563	26772	26778
	2,5	26588	26594		26773	
125	1,5	26599	26595	26564	26774	26779
	2,5	26560	26597		26775	
150	1,5	26561	26598	26566	26776	26780
	2,5	26589	26596	26567	26789	26781

		Art.-no.
	**Snap-on mounting, type E**	**55013**
	**Sealed shutter**	**–**

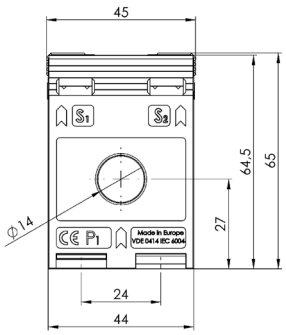

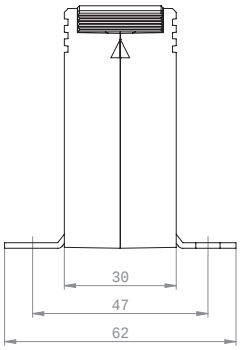

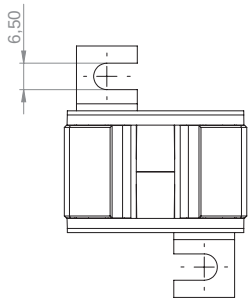

EASR 22.3

Tubular current transformer – Tariff applications



Round conductor	22,5 mm
Transformer width	61 mm
Height	78,5 mm
Depth	35 mm

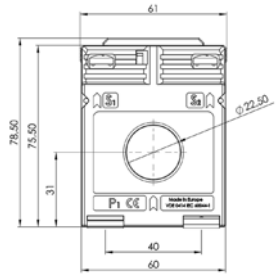

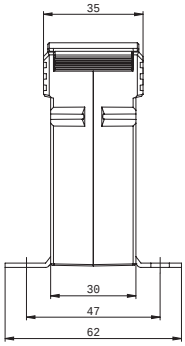

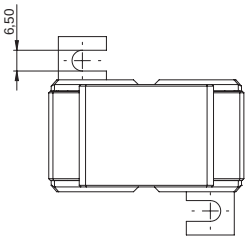

	Secondary current [A] / Class				
Primary current [A]	Burden [VA]	5 A Cl. 0,5 Art.-no.	5 A Cl. 0,5s Art.-no.	5 A Cl. 0,2 Art.-no.	1 A Cl. 0,5 Art.-no.	1 A Cl. 0,2 Art.-no.
100	1,5	3530	3552	3511	3730	3711
	2,5	3531	3553		3731	
150	1,5	3532	3554	3512	3732	3712
	2,5	3533	3555	3513	3733	3713
	5	3534	3556		3734	
200	1,5	3535	3557	3514	3735	3714
	2,5	3536	3558	3515	3736	3715
	5	3537	3559	3516	3737	3716
250	2,5	3538	3560	3517	3738	3717
	5	3539	3561	3518	3739	3718
300	2,5	3540	3562	3519	3740	3719
	5	3541	3563	3520	3741	3720
	10	3542	3564			
400	2,5	3543	3565	3521	3743	3721
	5	3544	3566	3522	3744	3722
	10	3545	3567	3523	3745	3723
500	2,5	3546	3568	3524	3746	3724
	5	3547	3569	3525	3747	3725
	10	3548	3570	3526	3748	3726
600	2,5	3549	3571	3527	3749	3727
	5	3550	3572	3528	3750	3728
	10	3551	3573	3529	3751	3729

		Art.-no.
	**Snap-on mounting, type A**	**53011**
	**Sealed shutter, type A**	**59040**

EASKL 19.34

Plug-in current transformer - Tariff applications

Current transformer designed for integrated installation into fuse switch disconnectors, type InLine II of size 00.



Busbar 1	19 x 12 mm
Round conductor	16,4 mm
Transformer width	45 mm
Height	65 mm
Depth	34 mm

	Secondary current [A] / Class			
Primary current [A]	Burden [VA]	5 A Cl. 0,5 Art.-no.	5 A Cl. 0,5s Art.-no.	1 A Cl. 0,5 Art.-no.	1 A Cl. 0,5s Art.-no.
80	1			34-7001	
100	1		34-5008	34-7002	34-7008
120	1,5	34-5003	34-5009	34-7003	34-7009
125	1,5	34-5004	34-5010	34-7004	34-7010
150	1,5	34-5005	34-5011	34-7005	34-7011
160	1,5	34-5006	34-5012	34-7006	34-7012
	2,5	34-5007		34-7007	

		Art.-no.
	**Snap-on mounting**	–
	**Sealed shutter**	–

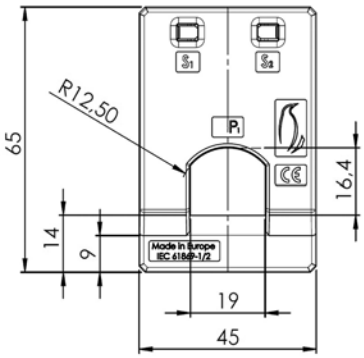



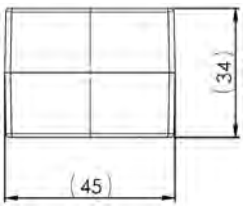

EASKL 31.34

Plug-in current transformer - Tariff applications



Current transformer designed for integrated installation into fuse switch disconnectors, type InLine II of size 123.

Busbar 1	31 x 12 mm
Round conductor	18,6 mm
Transformer width	60 mm
Height	63 mm
Depth	34 mm

		Secondary current [A] / Class			
Primary current [A]	Burden [VA]	5 A Cl. 0,5 Art.-no.	5 A Cl. 0,5s Art.-no.	1 A Cl. 0,5 Art.-no.	1 A Cl. 0,5s Art.-no.
200	1,5	34-5101	34-5107	34-7101	34-7107
250	2,5	34-5102	34-5108	34-7102	34-7108
300	2,5	34-5103	34-5109	34-7103	34-7109
400	5	34-5104	34-5110	34-7104	34-7110
500	5	34-5105	34-5111	34-7105	34-7111
600	5	34-5106	34-5112	34-7106	34-7112

		Art.-no.
	**Snap-on mounting**	–
	**Sealed shutter**	–

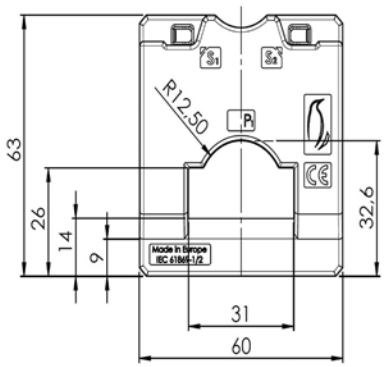



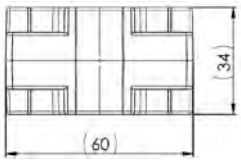

EAS 176.3

Plug-in current transformer – Tariff applications

Current transformer designed for integrated installation into fuse switch disconnectors, type SlimeLine of size XR1.



Busbar 1	17 x 6 mm
Round conductor	15,2 mm
Transformer width	44 mm
Height	65 mm
Depth	30 mm

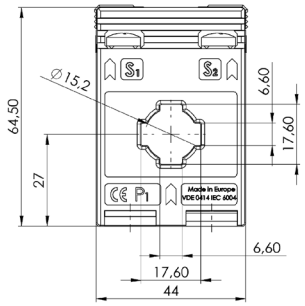

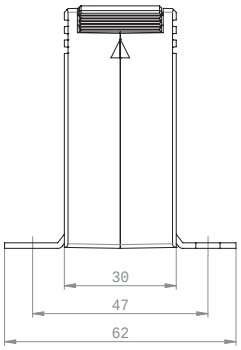

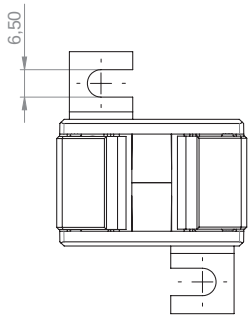

	Secondary current [A] / Class	
Primary current [A] / Burden [VA]	5 A Cl. 0,5 Art.-no.	1 A Cl. 0,5 Art.-no.
100 / 1,5	1030505004	1030705004
150 / 1,5	1030505001	1030705001
150 / 2,5	1030505005	1030705005
200 / 2,5	1030505002	1030705002
250 / 2,5	1030505003	1030705003

		Art.-no.
	**Snap-on mounting, type E**	**55013**
	**Sealed shutter**	**–**

Low-voltage current transformers for tariff applications

Plug-in current transformer

EASK 176.3	Busbar 1: 17 x 6 mm Round conductor: 15,2 mm Transformer width: 45 mm	Current range: 100 ... 250 A	Page: 196
EASK 21.3	Busbar 1: 20 x 10 mm Round conductor: 19,2 mm Transformer width: 61 mm	Current range: 100 ... 500 A	Page: 197
EASK 31.3	Busbar 1: 30 x 10 mm Busbar 2: 2x 20 x 10 mm Round conductor: 26 mm Transformer width: 61 mm	Current range: 100 ... 750 A	Page: 198
EASK 31.4	Busbar 1: 30 x 10 mm Busbar 2: 2x 20 x 10 mm Round conductor: 28 mm Transformer width: 61 mm	Current range: 100 ... 750 A	Page: 199
EASK 31.5 **EASK 31.5 2U**	Busbar 1: 30 x 10 mm Busbar 2: 2x 20 x 10 mm Round conductor: 28 mm Transformer width: 61 mm	Current range: 75 ... 750 A	Page: 200
EASK 31.6	Busbar 1: 30 x 10 mm Busbar 2: 20 x 13 mm Round conductor: 23 mm Transformer width: 95 mm	Current range: 50 ... 750 A	Page: 203
EASK 41.4 **EASK 41.4 2U**	Busbar 1: 40 x 10 mm Busbar 2: 2x 30 x 5 mm Round conductor: 32 mm Transformer width: 71 mm	Current range: 100 ... 750 A	Page: 204
EASK 541.4	Busbar 1: 40 x 10 mm Busbar 2: 2x 30 x 5 mm Round conductor: 32 mm Transformer width: 86 mm	Current range: 75 ... 1000 A	Page: 206

EASK 41.5	Busbar 1: 40 x 10 mm Busbar 2: 2x 30 x 5 mm Round conductor: 32 mm Transformer width: 71 mm	Current range: 75 ... 1000 A	Page: 207
EASK 41.6	Busbar 1: 40 x 12 mm Busbar 2: 30 x 15 mm Round conductor: 32 mm Transformer width: 95 mm	Current range: 75 ... 1000 A	Page: 208
EASK 51.4 **EASK 51.4 2U**	Busbar 1: 50 x 10 mm Busbar 2: 2x 40 x 10 mm Round conductor: 44 mm Transformer width: 86 mm	Current range: 100 ... 1000 A	Page: 209
EASK 51.6	Busbar 1: 50 x 12 mm Busbar 2: 2x 40 x 10 mm Round conductor: 40 mm Transformer width: 95 mm	Current range: 100 ... 1250 A	Page: 211
EASK 61.4	Busbar 1: 60 x 10 mm Busbar 2: 2x 50 x 10 mm Round conductor: 44 mm Transformer width: 96 mm	Current range: 200 ... 1500 A	Page: 212
EASK 61.6	Busbar 1: 60 x 10 mm Busbar 2: 2x 50 x 10 mm Round conductor: 40 mm Transformer width: 95 mm	Current range: 100 ... 1500 A	Page: 213
EASK 63.6	Busbar 1: 60 x 30 mm Round conductor: 30 mm Transformer width: 88 mm	Current range: 250 ... 1500 A	Page: 214
EASK 81.4	Busbar 1: 80 x 10 mm Busbar 2: 2x 60 x 10 mm Round conductor: 55 mm Transformer width: 120 mm	Current range: 400 ... 1500 A	Page: 215
EASK 105.6	Busbar 1: 100 x 55 mm Round conductor: 55 mm Transformer width: 129 mm	Current range: 600 ... 3000 A	Page: 216
EASK 123.3	Busbar 1: 123 x 30 mm Busbar 2: 3x 100 x 10 mm Round conductor: 100 mm Transformer width: 172 mm	Current range: 750 ... 3000 A	Page: 217

EASK 130.3

Busbar 1: 130 x 25 mm
Round conductor: 25 mm
Transformer width: 180 mm

Current range: 300 ... 1600 A

Page: 219

EASK 130.5

Busbar 1: 130 x 30 mm
Round conductor: 30 mm
Transformer width: 180 mm

Current range: 300 ... 3000 A

Page: 220

Type „E“ denotes that the current transformers are suitable for tariff applications

EASK 176.3

Plug-in current transformer – Tariff applications



Busbar 1	17 x 6 mm
Round conductor	15,2 mm
Transformer width	44 mm
Height	65 mm
Depth	46 mm

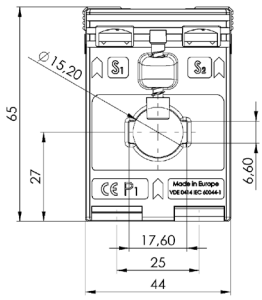

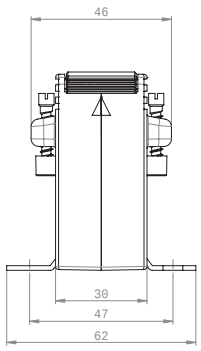

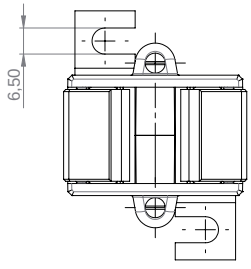

	Secondary current [A] / Class	
Primary current [A] / Burden [VA]	5 A Cl. 0,5 Art.-no.	1 A Cl. 0,5 Art.-no.
100 / 1,5	1020505004	1020705004
150 / 1,5	1020505001	1020705001
150 / 2,5	1020505005	1020705005
200 / 2,5	1020505002	1020705002
250 / 2,5	1020505003	1020705003

		Art.-no.
	**Snap-on mounting, type E**	**55013**
	**Sealed shutter**	**–**

EASK 21.3

Plug-in current transformer – Tariff applications



Busbar 1	20 x 10 mm
Round conductor	19,2 mm
Transformer width	61 mm
Height	78,5 mm
Depth	48 mm

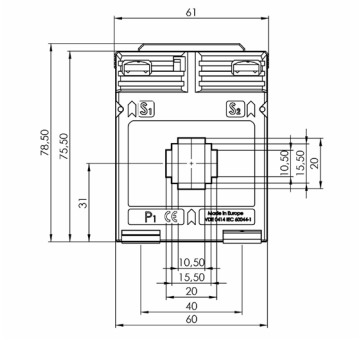

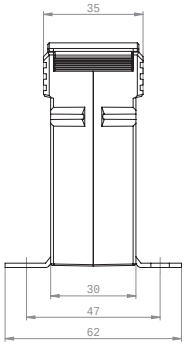

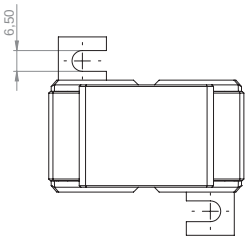

	Secondary current [A] / Class				
Primary current [A]	Burden [VA]	5 A Cl. 0,5 Art.-no.	5 A Cl. 0,5s Art.-no.	5 A Cl. 0,2 Art.-no.	1 A Cl. 0,5 Art.-no.	1 A Cl. 0,2 Art.-no.
100	1,5	6530	6549	6511	6730	6711
	2,5	6531	6550		6731	
150	1,5	6532	6551	6513	6732	6713
	2,5	6533	6552	6514	6733	6714
	5	6534	6553		6734	
200	1,5	6535	6554	6516	6735	6716
	2,5	6536	6555	6517	6736	6717
	5	6537	6556	6518	6737	6718
250	2,5	6538	6557	6519	6738	6719
	5	6539	6558	6520	6739	6720
300	2,5	6540	6559	6521	6740	6721
	5	6541	6560	6522	6741	6722
	10	6542	6561			
400	2,5	6543	6562	6524	6743	6724
	5	6544	6563	6525	6744	6725
	10	6545	6564	6526	6745	6726
500	2,5	6546	6565	6527	6746	6727
	5	6547	6566	6528	6747	6728
	10	6548	6567	6529	6748	6729

		Art.-no.
	**Snap-on mounting, type A**	**53011**
	**Sealed shutter, type A**	**59040**

EASK 31.3

Plug-in current transformer – Tariff applications



Busbar 1	30 x 10 mm
Busbar 2	2 x 20 x 10 mm
Round conductor	26 mm
Transformer width	61 mm
Height	78,5 mm
Depth	48 mm

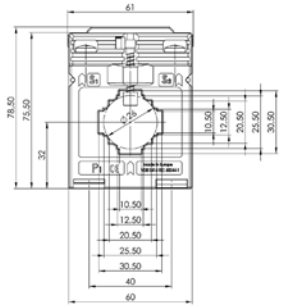

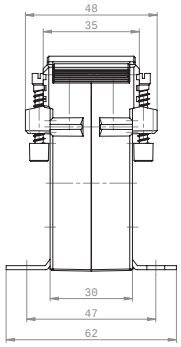

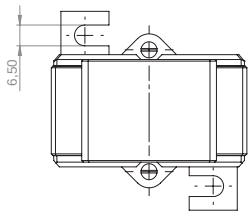

Primary current [A]	Burden [VA]	Secondary current [A] / Class 5 A Cl. 0,5 Art.-no.	5 A Cl. 0,5s Art.-no.	5 A Cl. 0,2 Art.-no.	1 A Cl. 0,5 Art.-no.	1 A Cl. 0,2 Art.-no.
100	1,5	7533	7555		7733	7711
	2,5	7534	7556		7734	
150	1,5	7535	7557	7513	7735	7713
	2,5	7536	7558		7736	
200	2,5	7537	7559	7515	7737	7715
	5	7538	7560	7516	7738	
250	2,5	7539	7561	7517	7739	7717
	5	7540	7562	7518	7740	
300	2,5	7541	7563	7519	7741	
	5	7542	7564	7520	7742	
400	2,5	7543	7565	7521	7743	7721
	5	7544	7566	7522	7744	
500	2,5	7546	7568	7524	7746	7724
	5	7547	7569	7525	7747	
600	2,5	7549	7571	7527	7749	
	5	7550	7572	7528	7750	
750	2,5	7552	7574	7530	7752	
	5	7553	7575	7531	7753	

		Art.-no.
	**Snap-on mounting, type A**	**53011**
	**Sealed shutter, type A**	**59040**

EASK 31.4

Plug-in current transformer – Tariff applications



Busbar 1	30 x 10 mm
Busbar 2	2 x 20 x 10 mm
Round conductor	28 mm
Transformer width	61 mm
Height	78,5 mm
Depth	58 mm

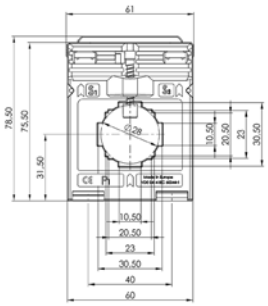

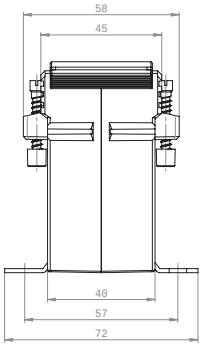

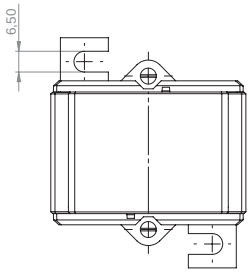

	Secondary current [A] / Class				
Primary current [A]	Burden [VA]	5 A Cl. 0,5 Art.-no.	5 A Cl. 0,5s Art.-no.	5 A Cl. 0,2 Art.-no.	1 A Cl. 0,5 Art.-no.	1 A Cl. 0,2 Art.-no.
100	1,5			8510		
	2,5	8535	8559	8511	8735	8711
150	2,5	8536	8560	8512	8736	8712
	5	8537	8561		8737	
200	2,5	8538	8562	8514	8738	8714
	5	8539	8563	8515	8739	8715
250	2,5	8540	8564	8516	8740	8716
	5	8541	8565	8517	8741	8717
300	2,5	8542	8566	8518	8742	8718
	5	8543	8567	8519	8743	8719
	10	8544	8568	8520	8744	8720
400	2,5	8545	8569	8521	8745	8721
	5	8546	8570	8522	8746	8722
	10	8547	8571	8523	8747	8723
500	2,5	8548	8572	8524	8748	8724
	5	8549	8573	8525	8749	8725
	10	8550	8574	8526	8750	8726
600	2,5	8551	8575	8527	8751	8727
	5	8552	8576	8528	8752	8728
	10	8553	8577	8529	8753	8729
	15	8554	8578		8754	
750	2,5	8555	8579	8531	8755	8731
	5	8556	8580	8532	8756	8732
	10	8557	8581	8533	8757	8733
	15	8558	8582		8758	

		Art.-no.
	**Snap-on mounting, type B**	**54011**
	**Sealed shutter, type B**	**59041**

EASK 31.5

Plug-in current transformer – Tariff applications



Busbar 1	30 x 10 mm
Round conductor	28 mm
Transformer width	61 mm
Height	78,5 mm
Depth	68 mm

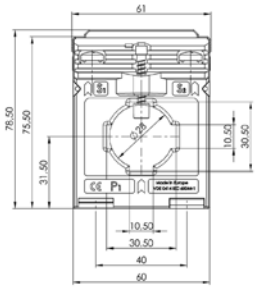

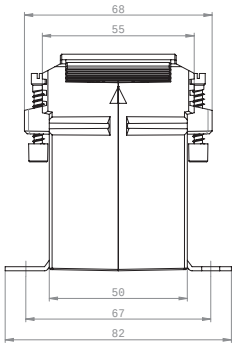

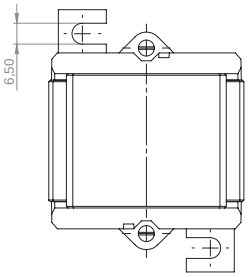

	Secondary current [A] / Class			
Primary current [A]	Burden [VA]	5 A Cl. 0,5 Art.-no.	5 A Cl. 0,5s Art.-no.	5 A Cl. 0,2 Art.-no.	5 A Cl. 0,2s Art.-no.
75	2,5	9542	9574		
100	2,5	9543	9575	9511	
	5	9544			
150	2,5	9545	9577	9513	
	5	9546	9578		
200	2,5	9547	9579	9515	V17-1704D
	5	9548	9580	9516	V17-1704F
	10	9549	9581		
250	2,5	9550	9582	9518	V17-1804D
	5	9551	9583	9519	V17-1804F
	10	9552	9584	9520	
	15	9553	9585		
300	2,5	9554	9586	9522	V17-1904D
	5	9555	9587	9523	V17-1904F
	10	9556	9588	9524	
	15	9557	9589		
400	2,5	9558	9590	9526	V17-2004D
	5	9559	9591	9527	V17-2004F
	10	9560	9592	9528	V17-2004H
	15	9561	9593		
500	2,5	9562	9594	9530	V17-2104D
	5	9563	9595	9531	V17-2104F
	10	9564	9596	9532	V17-2104H
	15	9565	9597		
600	2,5	9566	9598	9534	V17-2204D
	5	9567	9599	9535	V17-2204F
	10	9568	9600	9536	V17-2204H
	15	9569	9601		
750	5	9571	9603	9539	V17-2304F
	10	9572	9604	9540	V17-2304H
	15	9573	9605		

		Art.-no.
	**Snap-on mounting, type C**	**55011**
	**Sealed shutter, type B**	**59041**

EASK 31.5

Plug-in current transformer – Tariff applications



Busbar 1	30 x 10 mm
Round conductor	28 mm
Transformer width	61 mm
Height	78,5 mm
Depth	68 mm

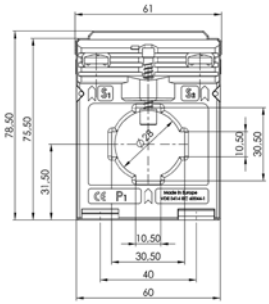

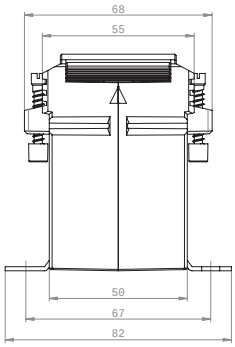

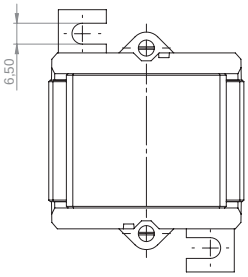

	Secondary current [A] / Class	
Primary current [A]	Burden [VA]	1 A Cl. 0,5 Art.-no.	1 A Cl. 0,2 Art.-no.
75	2,5	9742	
100	2,5	9743	9711
	5	9744	
150	2,5	9745	9713
	5	9746	
200	2,5	9747	9715
	5	9748	9716
	10	9749	
250	2,5	9750	9718
	5	9751	9719
	10	9752	9720
	15	9753	
300	2,5	9754	9722
	5	9755	9723
	10	9756	9724
	15	9757	
400	2,5	9758	9726
	5	9759	9727
	10	9760	9728
	15	9761	
500	2,5	9762	9730
	5	9763	9731
	10	9764	9732
	15	9765	
600	2,5	9766	9734
	5	9767	9735
	10	9768	9736
	15	9769	
750	5	9771	9739
	10	9772	9740
	15	9773	

		Art.-no.
	**Snap-on mounting, type C**	**55011**
	**Sealed shutter, type B**	**59041**

EASK 31.5 2U

Plug-in current transformer, secondary reconnectable – Tariff applications



Busbar 1	30 x 10 mm
Round conductor	28 mm
Transformer width	61 mm
Height	78,5 mm
Depth	68 mm

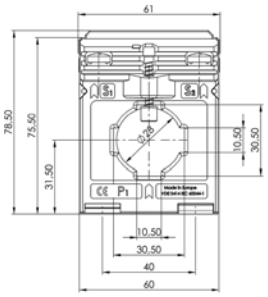

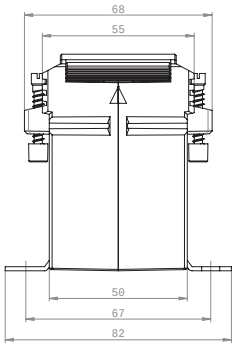

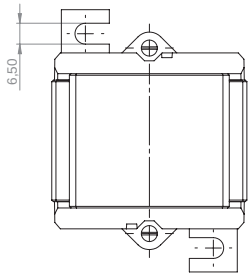

	Secondary current [A] / Class	
Primary current [A] / Burden [VA]	5 A Cl. 0,5s Art.-no.	5 A Cl. 0,5 Art.-no.
200-100 / 5-2,5	9616	9606
300-150 / 5-2,5	9618	9608
10-5	9619	9609
400-200 / 5-2,5	9620	9610
10-5	9621	9611
500-250 / 5-2,5	9622	9612
10-5	9623	9613
600-300 / 5-2,5	9624	9614
10-5	9625	9615
200-100 / 10-5		9607

		Art.-no.
	**Snap-on mounting, type C**	**55011**
	**Sealed shutter, type B**	**59041**

EASK 31.6

Plug-in current transformer – Tariff applications



Busbar 1	30 x 10 mm
Busbar 2	20 x 13 mm
Round conductor	23 mm
Transformer width	95 mm
Height	116 mm
Depth	74 mm

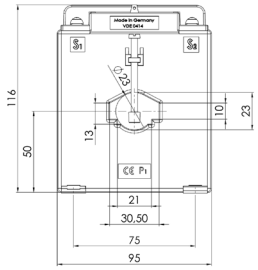

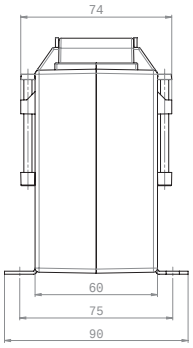

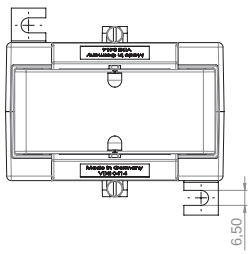

	Secondary current [A] / Class				
Primary current [A]	Burden [VA]	5 A Cl. 0,5 Art.-no.	5 A Cl. 0,5s Art.-no.	5 A Cl. 0,2 Art.-no.	1 A Cl. 0,5 Art.-no.	1 A Cl. 0,2 Art.-no.
50	2,5	10547	10585		10747	
75	2,5	10548	10586		10748	
	5	10549			10749	
100	2,5	10550	10588	10513	10750	10713
	5	10551	10589		10751	
	10	10552	10590		10752	
150	2,5	10553	10591	10516	10753	10716
	5	10554	10592	10517	10754	10717
	10	10555	10593		10755	
	15	10556	10594		10756	
200	5	10557	10595	10521	10757	10721
	10	10558	10596	10522	10758	10722
	15	10559	10597		10759	
250	5	10560	10598	10524	10760	10724
	10	10561	10599	10525	10761	10725
	15	10563	10600		10763	
300	5	10565	10602	10528	10765	10728
	10	10566	10603	10529	10766	10729
	15	10567	10604		10767	
	30	10568	10605		10768	
400	5	10569	10606	10532	10769	10732
	10	10570	10607	10533	10770	10733
	15	10571	10608	10534	10771	10734
	30	10572	10609		10772	
500	5	10573	10610	10536	10773	10736
	10	10574	10611	10537	10774	10737
	15	10575	10612	10538	10775	10738
	30	10576	10613		10776	
600	5	10577	10614	10540	10777	10740
	10	10578	10615	10541	10778	10741
	15	10579	10616	10542	10779	10742
	30	10580	10617		10780	
750	5	10581	10618	10543	10781	10743
	10	10582	10619	10544	10782	10744
	15	10583	10620	10545	10783	10745
	30	10584	10621		10784	

		Art.-no.
	**Snap-on mounting**	**–**
	**Sealed shutter, type E**	**59044**

EASK 41.4

Plug-in current transformer – Tariff applications



Busbar 1	40 x 10 mm
Busbar 2	2 x 30 x 5 mm
Round conductor	32 mm
Transformer width	71 mm
Height	88,5 mm
Depth	58 mm

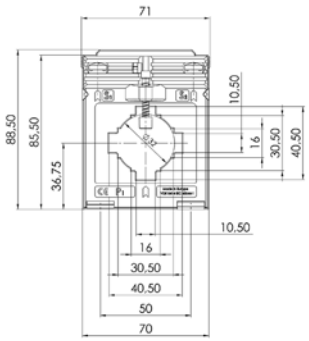

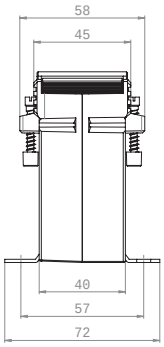

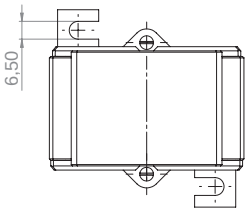

	Secondary current [A] / Class				
Primary current [A]	Burden [VA]	5 A Cl. 0,5 Art.-no.	5 A Cl. 0,5s Art.-no.	5 A Cl. 0,2 Art.-no.	1 A Cl. 0,5 Art.-no.	1 A Cl. 0,2 Art.-no.
100	1,5	13540	13569	13511	13740	13711
	2,5	13541	13570		13741	
150	1,5	13542	13571	13513	13742	13713
	2,5	13543	13572	13514	13743	13714
	5	13544	13573		13744	
200	1,5	13545	13574	13516	13745	13716
	2,5	13546	13575	13517	13746	13717
	5	13548	13576	13518	13747	13718
250	2,5	13549	13578	13520	13749	13720
	5	13550	13579	13521	13750	13721
300	2,5	13551	13580	13522	13751	13722
	5	13552	13581	13523	13752	13723
	10	13553	13582		13753	
400	2,5	13554	13583	13525	13754	13725
	5	13555	13584	13526	13755	13726
	10	13556	13585	13527	13756	13727
500	2,5	13557	13586	13528	13757	13728
	5	13558	13587	13529	13758	13729
	10	13559	13588	13530	13759	13730
	15	13560	13589	13531	13760	13731
600	2,5	13561	13590	13532	13761	13732
	5	13562	13591	13533	13762	13733
	10	13563	13592	13534	13763	13734
	15	13564	13593	13535	13764	13735
750	2,5	13565	13594	13536	13765	13736
	5	13566	13595	13537	13766	13737
	10	13567	13596	13538	13767	13738
	15	13568	13597		13768	13739

		Art.-no.
	**Snap-on mounting, type D**	**55012**
	**Sealed shutter, type B**	**59041**

EASK 41.4 2U

Plug-in current transformer, secondary reconnectable – Tariff applications



Busbar 1	40 x 10 mm
Busbar 2	2 x 30 x 5 mm
Round conductor	32 mm
Transformer width	71 mm
Height	88,5 mm
Depth	58 mm

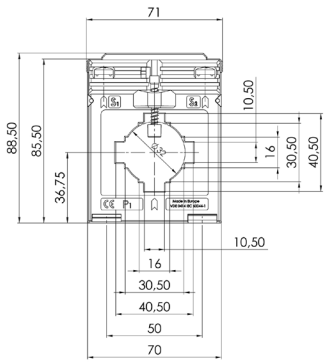

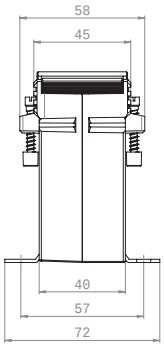

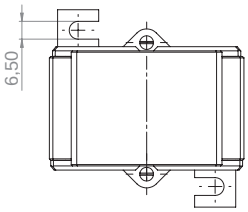

	Secondary current [A] / Class		
Primary current [A]	Burden [VA]	5 A Cl. 0,5 Art.-no.	5 A Cl. 0,5s Art.-no.
200-100	5-2,5	13598	13607
300-150	5-2,5	13599	13608
	10-5	13600	13609
400-200	5-2,5	13601	13610
	10-5	13602	13611
500-250	5-2,5	13603	13612
	10-5	13604	13613
600-300	5-2,5	13605	13614
	10-5	13606	13615

		Art.-no.
	**Snap-on mounting, type D**	**55012**
	**Sealed shutter, type B**	**59041**

EASK 541.4

Plug-in current transformer – Tariff applications



Busbar 1	40 x 10 mm
Busbar 2	2 x 30 x 5 mm
Round conductor	32 mm
Transformer width	86 mm
Height	101,5 mm
Depth	58 mm

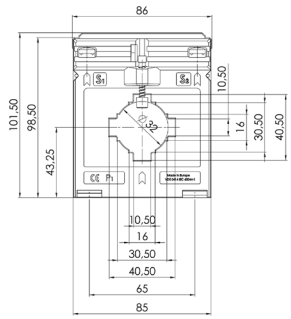

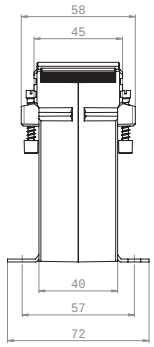

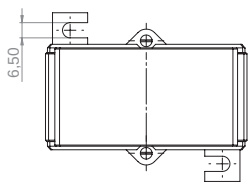

		Secondary current [A] / Class				
Primary current [A]	Burden [VA]	5 A Cl. 0,5 Art.-no.	5 A Cl. 0,5s Art.-no.	5 A Cl. 0,2 Art.-no.	1 A Cl. 0,5 Art.-no.	1 A Cl. 0,2 Art.-no.
75	1,5	15557	15603		15757	
	2,5	15558	15604		15758	
100	1,5	15559	15605	15513	15759	15713
	2,5	15560	15606	15514	15760	15714
	5	15561	15607		15761	
150	1,5	15562	15608	15516	15762	15716
	2,5	15563	15609	15517	15763	15717
	5	15564	15610	15518	15764	15718
	10	15565	15611		15765	
200	2,5	15566	15612	15520	15766	15720
	5	15567	15613	15521	15767	15721
	10	15568	15614	15522	15768	15722
	15	15569	15615		15769	
250	2,5	15570	15616	15524	15770	15724
	5	15571	15617	15525	15771	15725
	10	15572	15618	15526	15772	15726
	15	15573	15619		15773	
300	2,5	15574	15620	15528	15774	15728
	5	15575	15621	15529	15775	15729
	10	15576	15622	15530	15776	15730
	15	15577	15623	15531	15777	15731
400	2,5	15578	15624	15532	15778	15732
	5	15579	15625	15533	15779	15733
	10	15580	15626	15534	15780	15734
	15	15581	15627	15535	15781	15735
500	2,5	15583	15629	15537	15783	15737
	5	15584	15630	15538	15784	15738
	10	15585	15631	15539	15785	15739
	15	15586	15632	15540	15786	15740
600	2,5	15588	15634	15542	15788	15742
	5	15589	15635	15543	15789	15743
	10	15590	15636	15544	15790	15744
	15	15591	15637	15545	15791	15745
	30	15592			15792	
750	2,5	15593	15639	15547	15793	15747
	5	15594	15640	15548	15794	15748
	10	15595	15641	15549	15795	15749
	15	15596	15642	15550	15796	15750
	30	15597	15643		15797	
1000	2,5		15644	15552		
	5	15599	15645	15553	15799	15753
	10	15600	15646	15554	15800	15754
	15	15601	15647	15555	15801	15755
	30	15602	15648		15802	

		Art.-no.
	**Snap-on mounting**	**–**
	**Sealed shutter, type C**	**59042**

EASK 41.5

Plug-in current transformer – Tariff applications



Busbar 1	40 x 10 mm
Busbar 2	2 x 30 x 5 mm
Round conductor	32 mm
Transformer width	71 mm
Height	88,5 mm
Depth	68 mm

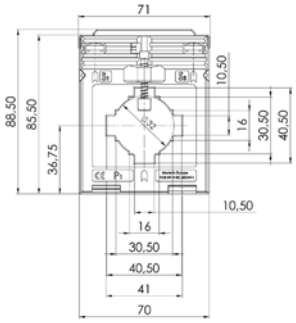

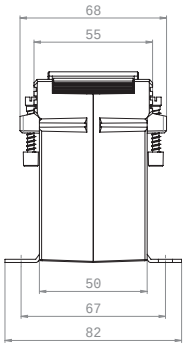

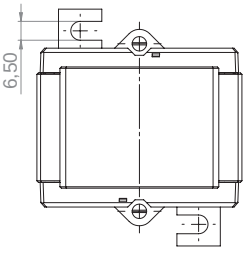

	Secondary current [A] / Class				
Primary current [A]	Burden [VA]	5 A Cl. 0,5 Art.-no.	5 A Cl. 0,5s Art.-no.	5 A Cl. 0,2 Art.-no.	1 A Cl. 0,5 Art.-no.	1 A Cl. 0,2 Art.-no.
75	2,5	1010505001			1010705001	
80	2,5	1010505002			1010705002	
100	1,5	1010505003	1010504001		1010705003	
	2,5	1010505004	1010504002		1010705004	
150	2,5	1010505005	1010504003	1010503002	1010705005	1010703003
	5	1010505006	1010504004		1010705006	
200	2,5	1010505007	1010504005	1010503003	1010705007	1010703005
	5	1010505008	1010504006	1010503004	1010705008	1010703006
250	2,5	1010505009	1010504007	1010503005	1010705010	1010703007
	5	1010505010	1010504008	1010503006	1010705011	1010703008
	10	1010505011	1010504009		1010705012	
300	2,5	1010505012	1010504010	1010503008	1010705013	1010703009
	5	1010505013	1010504011	1010503009	1010705014	1010703010
	10	1010505014	1010504012	1010503010	1010705015	1010703011
	15	1010505015	1010504013		1010705016	
400	2,5	1010505016	1010504014	1010503011	1010705017	1010703012
	5	1010505017	1010504015	1010503012	1010705018	1010703013
	10	1010505018	1010504016	1010503013	1010705019	1010703014
	15	1010505019	1010504017		1010705020	
500	2,5	1010505020	1010504018	1010503014	1010705021	1010703015
	5	1010505021	1010504019	1010503015	1010705022	1010703016
	10	1010505022	1010504020	1010503016	1010705023	1010703017
	15	1010505023	1010504021		1010705024	
600	2,5	1010505024	1010504022	1010503017	1010705025	1010703018
	5	1010505025	1010504023	1010503018	1010705026	1010703019
	10	1010505026	1010504024	1010503019	1010705027	1010703020
	15	1010505027	1010504025		1010705028	
750	2,5	1010505028	1010504026	1010503021	1010705029	1010703022
	5	1010505029	1010504027	1010503022	1010705030	1010703023
	10	1010505030	1010504028	1010503023	1010705031	1010703024
	15	1010505031	1010504029		1010705032	
800	2,5	1010505032	1010504030	1010503025	1010705033	1010703026
	5	1010505033	1010504031	1010503026	1010705034	1010703027
	10	1010505034	1010504032	1010503027	1010705035	1010703028
	15	1010505035	1010504033		1010705036	
1000	2,5	1010505036	1010504034	1010503029	1010705037	1010703030
	5	1010505037	1010504035	1010503030	1010705038	1010703031
	10	1010505038	1010504036	1010503031	1010705039	1010703032
	15	1010505039	1010504037		1010705040	

		Art.-no.
	**Snap-on mounting, type C**	**55011**
	**Sealed shutter, type B**	**59041**

EASK 41.6

Plug-in current transformer – Tariff applications



Busbar 1	40 x 12 mm
Busbar 2	30 x 15 mm
Round conductor	32 mm
Transformer width	95 mm
Height	116 mm
Depth	74 mm

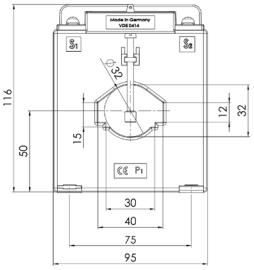

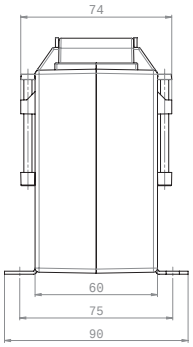

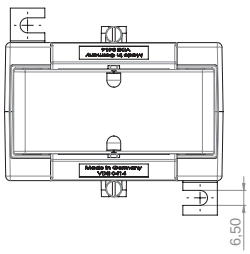

		Secondary current [A] / Class				
Primary current [A]	Burden [VA]	5 A Cl. 0,5 Art.-no.	5 A Cl. 0,5s Art.-no.	5 A Cl. 0,2 Art.-no.	1 A Cl. 0,5 Art.-no.	1 A Cl. 0,2 Art.-no.
75	2,5	14552	14595		14752	
	5	14553			14753	
100	2,5	14554	14597	14513	14754	14713
	5	14555	14598		14755	
	10	14556			14756	
150	2,5	14557	14600	14516	14757	14716
	5	14558	14601	14517	14758	14717
	10	14559	14602		14759	
	15	14560	14603		14760	
200	2,5	14561	14604	14520	14761	14720
	5	14562	14605	14521	14762	14721
	10	14563	14606	14522	14763	14722
	15	14564	14607		14764	
250	2,5	14565	14608	14524	14765	14724
	5	14566	14609	14525	14766	14725
	10	14567	14610	14526	14767	14726
	15	14568	14611		14768	
300	2,5	14569	14612	14528	14769	14728
	5	14570	14613	14529	14770	14729
	10	14571	14614	14530	14771	14730
	15	14572	14615	14531	14772	14731
400	2,5	14573	14616	14532	14773	14732
	5	14574	14617	14533	14774	14733
	10	14575	14618	14534	14775	14734
	15	14576	14619	14535	14776	14735
500	2,5	14577	14620	14536	14777	14736
	5	14578	14621	14537	14778	14737
	10	14579	14622	14538	14779	14738
	15	14580	14623	14539	14780	14739
600	2,5	14581	14624	14540	14781	14740
	5	14582	14625	14541	14782	14741
	10	14583	14626	14542	14783	14742
	15	14584	14627	14543	14784	14743
	30	14585	14628		14785	
750	2,5	14586	14629	14544	14786	14744
	5	14587	14630	14545	14787	14745
	10	14588	14631	14546	14788	14746
	15	14589	14632	14547	14789	14747
	30	14590	14633		14790	
1000	5	14591	14634	14548	14791	14748
	10	14592	14635	14549	14792	14749
	15	14593	14636	14550	14793	14750
	30	14594	14637		14794	

		Art.-no.
	**Snap-on mounting**	**–**
	**Sealed shutter, type E**	**59044**

EASK 51.4

Plug-in current transformer – Tariff applications



Busbar 1	50 x 12 mm
Busbar 2	2 x 40 x 10 mm
Round conductor	44 mm
Transformer width	86 mm
Height	101,5 mm
Depth	58 mm

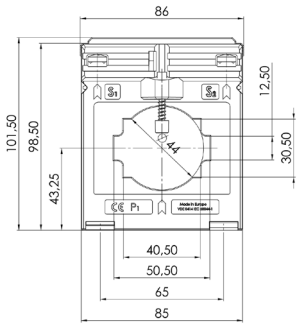

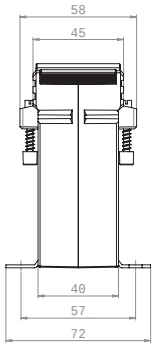

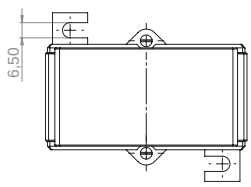

	Secondary current [A] / Class				
Primary current [A]	Burden [VA]	5 A Cl. 0,5 Art.-no.	5 A Cl. 0,5s Art.-no.	5 A Cl. 0,2 Art.-no.	1 A Cl. 0,5 Art.-no.	1 A Cl. 0,2 Art.-no.
100	1,5	16542	16573		16742	
	2,5	16543	16574		16743	
150	1,5	16544	16575	16513	16744	16713
	2,5	16545	16576		16745	
200	1,5	16546	16577	16515	16746	16715
	2,5	16547	16578	16516	16747	16716
	5	16548	16579	16517	16748	16717
250	1,5	16549	16580	16518	16749	16718
	2,5	16550	16581	16519	16750	16719
	5	16551	16582	16520	16751	16720
300	2,5	16553	16584	16522	16753	16722
	5	16554	16585	16523	16754	16723
400	2,5	16555	16586	16524	16755	16724
	5	16556	16587	16525	16756	16725
	10	16557	16588	16526	16757	16726
500	2,5	16558	16589	16527	16758	16727
	5	16559	16590	16528	16759	16728
	10	16560	16591	16529	16760	16729
600	2,5	16561	16592	16530	16761	16730
	5	16562	16593	16531	16762	16731
	10	16563	16594	16532	16763	16732
	15	16564	16595	16533	16764	16733
750	2,5	16565	16596	16534		16734
	5	16566	16597	16535	16766	16735
	10	16567	16598	16536	16767	16736
	15	16568	16599	16537	16768	16737
1000	5	16570	16601	16539	16770	16739
	10	16571	16602	16540	16771	16740
	15	16572	16603	16541	16772	16741

		Art.-no.
	**Snap-on mounting**	**–**
	**Sealed shutter, type C**	**59042**

EASK 51.4 2U

Plug-in current transformer, secondary reconnectable – Tariff applications



Busbar 1	50 x 12 mm
Busbar 2	2 x 40 x 10 mm
Round conductor	44 mm
Transformer width	86 mm
Height	101,5 mm
Depth	58 mm

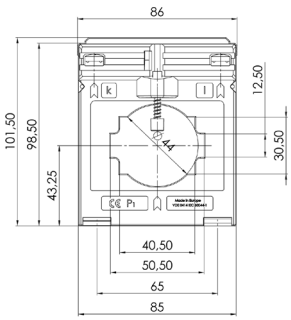

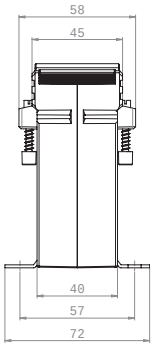

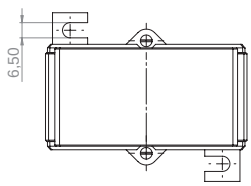

Primary current [A]	Burden [VA]	Secondary current [A] / Class: 5 A Cl. 0,5 Art.-no.	Secondary current [A] / Class: 5 A Cl. 0,5s Art.-no.
200-100	5-2,5	16611	16621
300-150	5-2,5	16612	16622
400-200	5-2,5	16613	16623
	10-5	16614	16624
500-250	5-2,5	16615	16625
	10-5	16616	16626
600-300	5-2,5	16617	16627
	10-5	16618	16628
1000-500	5-2,5	16619	16629
	10-5	16620	16630

		Art.-no.
	**Snap-on mounting**	**–**
	**Sealed shutter, type C**	**59042**

EASK 51.6

Plug-in current transformer – Tariff applications



Busbar 1	50 x 12 mm
Busbar 2	40 x 30 mm
Round conductor	40 mm
Transformer width	95 mm
Height	116 mm
Depth	74 mm

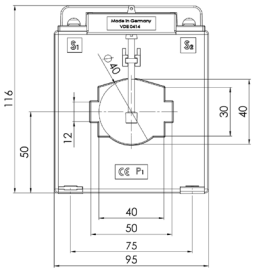

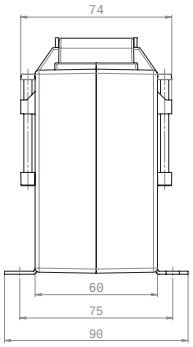

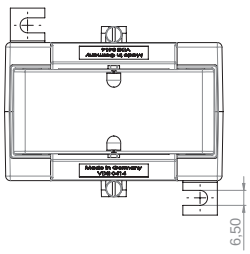

		Secondary current [A] / Class				
Primary current [A]	Burden [VA]	5 A Cl. 0,5 Art.-no.	5 A Cl. 0,5s Art.-no.	5 A Cl. 0,2 Art.-no.	1 A Cl. 0,5 Art.-no.	1 A Cl. 0,2 Art.-no.
100	2,5	17555	17599	17511	17755	17711
	5	17556	17600		17756	
150	2,5	17557	17601	17513	17757	17713
	5	17558	17602	17514	17758	17714
	10	17559	17603		17759	
200	2,5	17560	17604	17516	17760	17716
	5	17561	17605	17517	17761	17717
	10	17562	17606		17762	
250	2,5	17563	17607	17519	17763	17719
	5	17564	17608	17520	17764	17720
	10	17565	17609	17521	17765	17721
	15	17566	17610		17766	
300	2,5	17567	17611	17523	17767	17723
	5	17568	17612	17524	17768	17724
	10	17569	17613	17525	17769	17725
	15	17570	17614		17770	
400	2,5	17571	17615	17527	17771	17727
	5	17572	17616	17528	17772	17728
	10	17573	17617	17529	17773	17729
	15	17574	17618		17774	
500	2,5	17575	17619	17531	17775	17731
	5	17576	17620	17532	17776	17732
	10	17577	17621	17533	17777	17733
	15	17578	17622		17778	
600	2,5	17579	17623	17535	17779	17735
	5	17580	17624	17536	17780	17736
	10	17581	17625	17537	17781	17737
	15	17582	17626	17538	17782	17738
750	2,5	17583	17627	17539	17783	17739
	5	17584	17628	17540	17784	17740
	10	17585	17629	17541	17785	17741
	15	17586	17630	17542	17786	17742
1000	5	17587	17631	17543	17787	17743
	10	17588	17632	17544	17788	17744
	15	17589	17633	17545	17789	17745
	30	17590	17634		17790	
1200	5	17591	17635	17547	17791	17747
	10	17592	17636	17548	17792	17748
	15	17593	17637	17549	17793	17749
	30	17594	17638		17794	
1250	5	17595	17639	17551	17795	17751
	10	17596	17640	17552	17796	17752
	15	17597	17641	17553	17797	17753
	30	17598	17642		17798	

		Art.-no.
	**Snap-on mounting**	**–**
	**Sealed shutter, type E**	**59044**

EASK 61.4

Plug-in current transformer – Tariff applications



Busbar 1	60 x 10 mm
Busbar 2	2 x 50 x 10 mm
Round conductor	44 mm
Transformer width	96 mm
Height	108,5 mm
Depth	58 mm

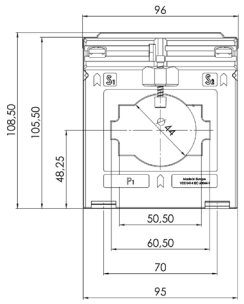

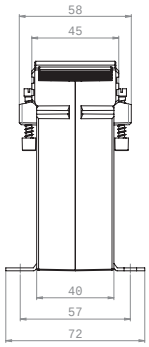

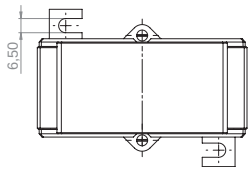

		Secondary current [A] / Class				
Primary current [A]	Burden [VA]	5 A Cl. 0,5 Art.-no.	5 A Cl. 0,5s Art.-no.	5 A Cl. 0,2 Art.-no.	1 A Cl. 0,5 Art.-no.	1 A Cl. 0,2 Art.-no.
200	1,5	19555	19599	19511	19755	19711
	2,5	19556	19600	19512	19756	19712
250	1,5	19557	19601	19513	19757	19713
	2,5	19558	19602	19514	19758	19714
	5	19559	19603	19515	19759	19715
300	1,5	19560	19604	19516	19760	19716
	2,5	19561	19605	19517	19761	19717
	5	19562	19606	19518	19762	19718
	10	19563	19607			
400	2,5	19564	19608	19520	19764	19720
	5	19565	19609	19521	19765	19721
	10	19566	19610	19522	19766	19722
500	2,5	19567	19611	19523	19767	19723
	5	19568	19612	19524	19768	19724
	10	19569	19613	19525	19769	19725
	15	19570	19614		19770	
600	2,5	19571	19615	19527	19771	19727
	5	19572	19616	19528	19772	19728
	10	19573	19617	19529	19773	19729
	15	19574	19618	19530	19774	19730
750	2,5	19575	19619	19531	19775	19731
	5	19576	19620	19532	19776	19732
	10	19577	19621	19533	19777	19733
	15	19578	19622	19534	19778	19734
1000	5	19581	19625	19537	19780	19737
	10	19582	19626	19538	19781	19738
	15	19583	19627	19539	19782	19739
1200	2,5	19585	19629	19541		
	5	19586	19630	19542	19785	19741
	10	19587	19631	19543	19786	19742
	15	19588	19632	19544	19787	19743
1250	5	19590	19634	19546	19790	19746
	10	19591	19635	19547	19791	19747
	15	19592	19636	19548	19792	19748
	30	19593	19637			
1500	5	19595	19639	19551	19795	19751
	10	19596	19640	19552	19796	19752
	15	19597	19641	19553	19797	19753
	30	19598	19642			

		Art.-no.
	**Snap-on mounting**	**–**
	**Sealed shutter, type C**	**59042**

EASK 61.6

Plug-in current transformer – Tariff applications



Busbar 1	60 x 10 mm
Busbar 2	50 x 30 mm
Round conductor	40 mm
Transformer width	95 mm
Height	116 mm
Depth	74 mm

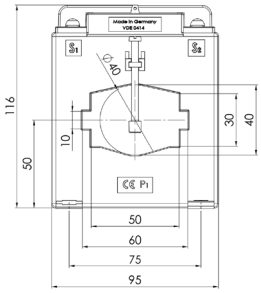

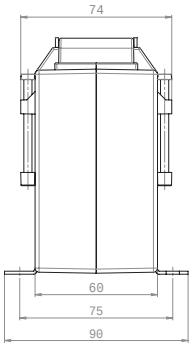

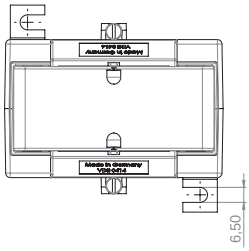

		Secondary current [A] / Class				
Primary current [A]	Burden [VA]	5 A Cl. 0,5 Art.-no.	5 A Cl. 0,5s Art.-no.	5 A Cl. 0,2 Art.-no.	1 A Cl. 0,5 Art.-no.	1 A Cl. 0,2 Art.-no.
200	2,5	20552	20593	20511	20752	20711
	5	20553	20594		20753	
250	2,5	20554	20595	20513	20754	20713
	5	20555	20596	20514	20755	20714
	10	20556	20597		20756	
300	2,5	20557	20598	20516	20757	20716
	5	20558	20599	20517	20758	20717
	10	20559	20600	20518	20759	20718
	15	20560	20601		20760	
400	2,5	20561	20602	20520	20761	20720
	5	20562	20603	20521	20762	20721
	10	20563	20604	20522	20763	20722
	15	20564	20605		20764	
500	2,5	20565	20606	20524	20765	20724
	5	20566	20607	20525	20766	20725
	10	20567	20608	20526	20767	20726
	15	20568	20609		20768	
600	2,5	20569	20610	20528	20769	20728
	5	20570	20611	20529	20770	20729
	10	20571	20612	20530	20771	20730
	15	20572	20613		20772	
750	2,5	20573	20614	20532	20773	20732
	5	20574	20615	20533	20774	20733
	10	20575	20616	20534	20775	20734
	15	20576	20617	20535	20776	20735
1000	5	20577	20618	20536	20777	20736
	10	20578	20619	20537	20778	20737
	15	20579	20620	20538	20779	20738
1200	5	20581	20622	20540	20781	20740
	10	20582	20623	20541	20782	20741
	15	20583	20624	20542	20783	20742
	30	20584	20625		20784	
1250	5	20585	20626	20544	20785	20744
	10	20586	20627	20545	20786	20745
	15	20587	20628	20546	20787	20746
	30	20588	20629		20788	
1500	5	20589	20630	20548	20789	20748
	10	20590	20631	20549	20790	20749
	15	20591	20632	20550	20791	20750
	30	20592	20633		20792	

		Art.-no.
	**Snap-on mounting**	**–**
	**Sealed shutter, type E**	**59044**

EASK 63.6

Plug-in current transformer – Tariff applications



Busbar 1	60 x 30 mm
Round conductor	30 mm
Transformer width	88 mm
Height	132 mm
Depth	78 mm

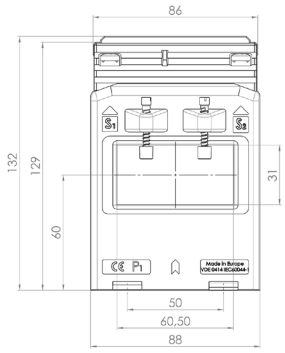

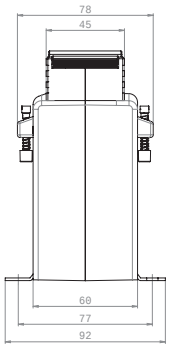

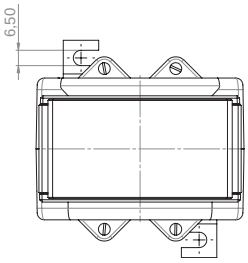

	Secondary current [A] / Class				
Primary current [A]	Burden [VA]	5 A Cl. 0,5 Art.-no.	5 A Cl. 0,5s Art.-no.	5 A Cl. 0,2 Art.-no.	1 A Cl. 0,5 Art.-no.	1 A Cl. 0,2 Art.-no.
250	2,5	85558	85602	85513	85758	85713
	5	85559	85603		85759	
300	2,5	85560	85604	85515	85760	85715
	5	85561	85605	85516	85761	85716
	10	85562	85606		85762	
400	2,5	85563	85607	85518	85763	85718
	5	85564	85608	85519	85764	85719
	10	85565	85609		85765	
500	2,5	85566	85610	85521	85766	85721
	5	85567	85611	85522	85767	85722
	10	85568	85612	85523	85768	85723
	15	85569	85613		85769	
600	2,5	85570	85614	85525	85770	85725
	5	85571	85615	85526	85771	85726
	10	85572	85616	85527	85772	85727
	15	85573	85617	85528	85773	85728
750	5	85574	85618	85530	85774	85730
	10	85575	85619	85531	85775	85731
	15	85576	85620	85532	85776	85732
	30	85577	85621		85777	
1000	5	85578	85622	85534	85778	85734
	10	85579	85623	85535	85779	85735
	15	85580	85624	85536	85780	85736
	30	85581	85625		85781	
1200	5	85582	85626	85538	85782	85738
	10	85583	85627	85539	85783	85739
	15	85584	85628	85540	85784	85740
	30	85585	85629		85785	
1250	5	85586	85630	85542	85786	85742
	10	85587	85631	85543	85787	85743
	15	85588	85632	85544	85788	85744
	30	85589	85633		85789	
1500	5	85590	85634	85546	85790	85746
	10	85591	85635	85547	85791	85747
	15	85592	85636	85548	85792	85748
	30	85593	85637		85793	

		Art.-no.
	**Snap-on mounting**	**–**
	**Sealed shutter, type C**	**59042**

EASK 81.4

Plug-in current transformer – Tariff applications



Busbar 1	80 x 10 mm
Busbar 2	60 x 30 mm
Busbar 3	2 x 60 x 10 mm
Round conductor	55 mm
Transformer width	120 mm
Height	126,5 mm
Depth	58 mm

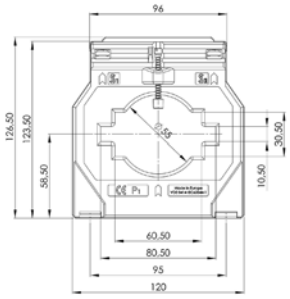

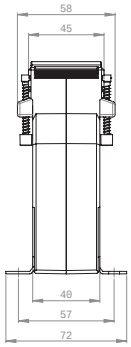

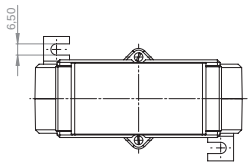

	Secondary current [A] / Class				
Primary current [A]	Burden [VA]	5 A Cl. 0,5 Art.-no.	5 A Cl. 0,5s Art.-no.	5 A Cl. 0,2 Art.-no.	1 A Cl. 0,5 Art.-no.	1 A Cl. 0,2 Art.-no.
400	2,5	21541	21571	21511	21741	21711
	5	21542	21572	21512	21742	
	10	21543			21743	
500	2,5	21544	21574	21514	21744	21714
	5	21545	21575	21515	21745	21715
	10	21546	21576	21516	21746	21716
600	2,5	21547	21577	21517	21747	21717
	5	21548	21578	21518	21748	21718
	10	21549	21579	21519	21749	21719
750	2,5	21551	21581	21521	21751	21721
	5	21552	21582	21522	21752	21722
	10	21553	21583	21523	21753	21723
1000	5	21556	21586	21526	21756	21726
	10	21557	21587	21527	21757	21727
	15	21558	21588		21758	
1200	5	21560	21590	21530	21760	21730
	10	21561	21591	21531	21761	21731
	15	21562	21592	21532	21762	21732
1250	5	21564	21594	21534	21764	21734
	10	21565	21595	21535	21765	21735
	15	21566	21596	21536	21766	21736
1500	5	21568	21598	21538	21768	21738
	10	21569	21599	21539	21769	21739
	15	21570	21600	21540	21770	21740

		Art.-no.
	**Snap-on mounting**	**–**
	**Sealed shutter, type C**	**59042**

EASK 105.6

Plug-in current transformer - Tariff applications



Busbar 1	100 x 55 mm
Round conductor	55 mm
Transformer width	129 mm
Height	170 mm
Depth	78 mm

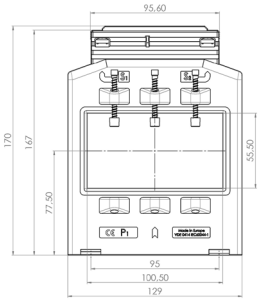

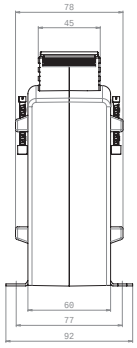

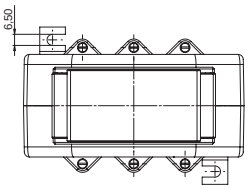

	Secondary current [A] / Class				
Primary current [A]	Burden [VA]	5 A Cl. 0,5 Art.-no.	5 A Cl. 0,5s Art.-no.	5 A Cl. 0,2 Art.-no.	1 A Cl. 0,5 Art.-no.	1 A Cl. 0,2 Art.-no.
600	2,5	86568	86622	86515	86768	86715
	5	86569	86623	86516	86769	86716
750	2,5	86571	86625	86518	86771	86718
	5	86572	86626	86519	86772	86719
	10	86573	86627	86520	86773	86720
1000	2,5	86574				
	5	86575	86629	86522	86775	86722
	10	86576	86630	86523	86776	86723
	15	86577	86631	86524	86777	86724
1200	5	86579	86633	86526	86779	86726
	10	86580	86634	86527	86780	86727
	15	86581	86635	86528	86781	86728
1250	5	86583	86637	86530	86783	86730
	10	86584	86638	86531	86784	86731
	15	86585	86639	86532	86785	86732
	30	86586	86640		86786	
1500	5	86588	86642	86535	86788	86735
	10	86589	86643	86536	86789	86736
	15	86590	86644	86537	86790	86737
	30	86591	86645	86538	86791	86738
1600	5		86647	86540		
	10	86594	86648	86541	86794	86741
	15	86595	86649	86542	86795	86742
	30	86596	86650	86543	86796	86743
2000	5	86598	86652	86545		
	10	86599	86653	86546	86799	86746
	15	86600	86654	86547	86800	86747
	30	86601	86655	86548	86801	
2500	5	86603	86657	86550		
	10	86604	86658	86551	86804	86751
	15	86605	86659	86552	86805	86752

		Art.-no.
	**Snap-on mounting**	**–**
	**Sealed shutter, type C**	**59042**

EASK 123.3

Plug-in current transformer - Tariff applications



Busbar 1	120 x 30 mm
Busbar 2	3 x 100 x 10 mm
Round conductor	100 mm
Transformer width	172 mm
Height	187,5 mm
Depth	52 mm

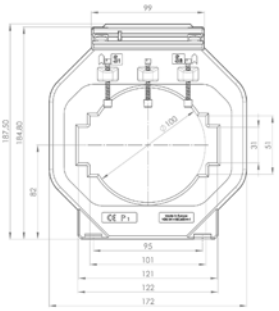

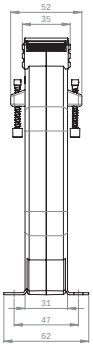

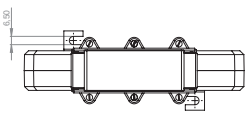

	Secondary current [A] / Class		
Primary current [A]	Burden [VA]	5 A Cl. 0,5 Art.-no.	5 A Cl. 0,5s Art.-no.	5 A Cl. 0,2 Art.-no.
750	2,5	V56-2301D	V56-2302D	
	5	V56-2301F	V56-2302F	
	10	V56-2301H		
1000	2,5	V56-2501D	V56-2502D	V56-2503D
	5	V56-2501F	V56-2502F	V56-2503F
	10	V56-2501H	V56-2502H	
1200	5	V56-2601F	V56-2602F	V56-2603F
	10	V56-2601H	V56-2602H	V56-2603H
	15	V56-2601J	V56-2602J	
1250	5	V56-2701F	V56-2702F	V56-2703F
	10	V56-2701H	V56-2702H	V56-2703H
	15	V56-2701J	V56-2702J	V56-2703J
1500	5	V56-2801F	V56-2802F	V56-2803F
	10	V56-2801H	V56-2802H	V56-2803H
	15	V56-2801J	V56-2802J	V56-2803J
1600	5	V56-2901F	V56-2902F	V56-2903F
	10	V56-2901H	V56-2902H	V56-2903H
	15	V56-2901J	V56-2902J	V56-2903J
2000	5	V56-3001F	V56-3002F	V56-3003F
	10	V56-3001H	V56-3002H	V56-3003H
	15	V56-3001J	V56-3002J	V56-3003J
2500	5	V56-3201F	V56-3202F	V56-3203F
	10	V56-3201H	V56-3202H	V56-3203H
	15	V56-3201J	V56-3202J	V56-3203J
3000	5	V56-3301F	V56-3302F	V56-3303F
	10	V56-3301H	V56-3302H	V56-3303H

		Art.-no.
	**Snap-on mounting**	**–**
	**Sealed shutter, type A**	**59040**

EASK 123.3

Plug-in current transformer - Tariff applications



Busbar 1	120 x 30 mm
Busbar 2	3 x 100 x 10 mm
Round conductor	100 mm
Transformer width	172 mm
Height	187,5 mm
Depth	52 mm

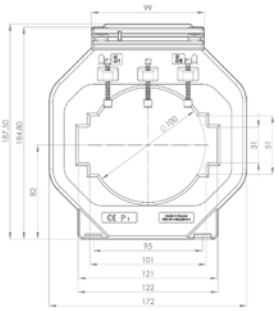

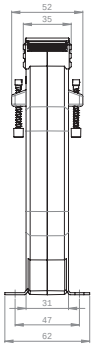

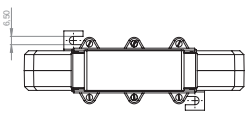

	Secondary current [A] / Class		
Primary current [A] / Burden [VA]	1 A Cl. 0,5 Art.-no.	1 A Cl. 0,5s Art.-no.	1 A Cl. 0,2 Art.-no.
750 / 2,5	V56-2311D	V56-2312D	
750 / 5	V56-2311F	V56-2312F	
750 / 10	V56-2311H	V56-2312H	
1000 / 2,5	V56-2511D	V56-2512D	V56-2513D
1000 / 5	V56-2511F	V56-2512F	V56-2513F
1000 / 10	V56-2511H	V56-2512H	
1200 / 5	V56-2611F	V56-2612F	V56-2613F
1200 / 10	V56-2611H	V56-2612H	V56-2613H
1200 / 15	V56-2611J	V56-2612J	
1250 / 5	V56-2711F	V56-2712F	V56-2713F
1250 / 10	V56-2711H	V56-2712H	V56-2713H
1250 / 15	V56-2711J	V56-2712J	V56-2713J
1500 / 5	V56-2811F	V56-2812F	V56-2813F
1500 / 10	V56-2811H	V56-2812H	V56-2813H
1500 / 15	V56-2811J	V56-2812J	V56-2813J
1600 / 5	V56-2911F	V56-2912F	V56-2913F
1600 / 10	V56-2911H	V56-2912H	V56-2913H
1600 / 15	V56-2911J	V56-2912J	V56-2913J
2000 / 5	V56-3011F	V56-3012F	V56-3013F
2000 / 10	V56-3011H	V56-3012H	V56-3013H
2000 / 15	V56-3011J	V56-3012J	V56-3013J
2500 / 5	V56-3211F	V56-3212F	V56-3213F
2500 / 10	V56-3211H	V56-3212H	V56-3213H
2500 / 15	V56-3211J	V56-3212J	V56-3213J

		Art.-no.
	**Snap-on mounting**	**–**
	**Sealed shutter, type A**	**59040**

EASK 130.3

Plug-in current transformer - Tariff applications



Busbar 1	130 x 25 mm
Transformer width	180 mm
Height	100 mm
Depth	50 mm

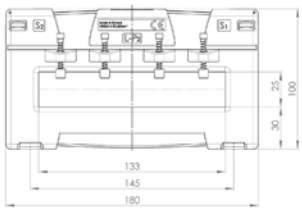

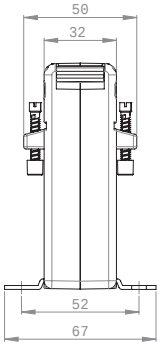

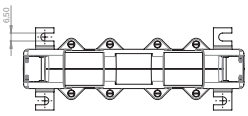

	Secondary current [A] / Class				
Primary current [A]	Burden [VA]	5 A Cl. 0,5 Art.-no.	5 A Cl. 0,5s Art.-no.	5 A Cl. 0,2 Art.-no.	1 A Cl. 0,5 Art.-no.	1 A Cl. 0,2 Art.-no.
300	2,5	V50-1901D	V50-1902D		V50-1911D	
400	2,5	V50-2001D	V50-2002D	V50-2003D	V50-2011D	V50-2013D
	5	V50-2001F	V50-2002F		V50-2011F	
500	2,5	V50-2101D	V50-2102D	V50-2103D	V50-2111D	V50-2113D
	5	V50-2101F	V50-2102F		V50-2111F	
600	2,5	V50-2201D	V50-2202D	V50-2203D	V50-2211D	V50-2213D
	5	V50-2201F	V50-2202F	V50-2203F	V50-2211F	V50-2213F
	10	V50-2201H			V50-2211H	
750	2,5	V50-2301D	V50-2302D	V50-2303D	V50-2311D	V50-2313D
	5	V50-2301F	V50-2302F	V50-2303F	V50-2311F	V50-2313F
	10	V50-2301H	V50-2302H		V50-2311H	
	15	V50-2301J			V50-2311J	
1000	5	V50-2501F	V50-2502F	V50-2503F	V50-2511F	V50-2513F
	10	V50-2501H	V50-2502H		V50-2511H	
	15	V50-2501J	V50-2502J		V50-2511J	
1200	5	V50-2601F	V50-2602F	V50-2603F	V50-2611F	V50-2613F
	10	V50-2601H	V50-2602H	V50-2603H	V50-2611H	V50-2613H
	15	V50-2601J	V50-2602J		V50-2611J	
1250	5	V50-2701F	V50-2702F	V50-2703F	V50-2711F	V50-2713F
	10	V50-2701H	V50-2702H	V50-2703H	V50-2711H	V50-2713H
	15	V50-2701J	V50-2702J	V50-2703J	V50-2711J	V50-2713J
1500	5	V50-2801F	V50-2802F	V50-2803F	V50-2811F	V50-2813F
	10	V50-2801H	V50-2802H	V50-2803H	V50-2811H	V50-2813H
	15	V50-2801J	V50-2802J	V50-2803J	V50-2811J	V50-2813J
	30	V50-2801L	V50-2802L		V50-2811L	
1600	5	V50-2901F	V50-2902F	V50-2903F	V50-2911F	V50-2913F
	10	V50-2901H	V50-2902H	V50-2903H	V50-2911H	V50-2913H
	15	V50-2901J	V50-2902J	V50-2903J	V50-2911J	V50-2913J
	30	V50-2901L	V50-2902L		V50-2911L	

		Art.-no.
	**Snap-on mounting**	–
	**Sealed shutter**	–

EASK 130.5

Plug-in current transformer - Tariff applications



Busbar 1	130 x 30 mm
Transformer width	180 mm
Height	120 mm
Depth	68 mm

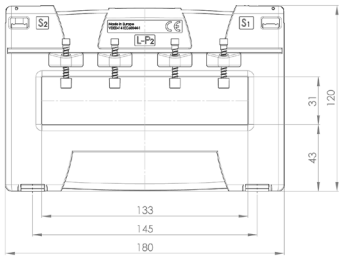

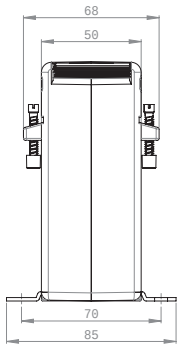

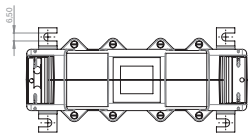

		Secondary current [A] / Class		
Primary current [A]	Burden [VA]	5 A Cl. 0,5 Art.-no.	5 A Cl. 0,5s Art.-no.	1 A Cl. 0,5 Art.-no.
300	2,5	V51-1901D	V51-1902D	V51-1911D
	5	V51-1901F		V51-1911F
	10	V51-1901H		V51-1911H
400	2,5	V51-2001D	V51-2002D	V51-2011D
	5	V51-2001F	V51-2002F	V51-2011F
	10	V51-2001H		V51-2011H
500	2,5	V51-2101D	V51-2102D	V51-2111D
	5	V51-2101F	V51-2102F	V51-2111F
	10	V51-2101H	V51-2102H	V51-2111H
600	2,5	V51-2201D	V51-2202D	V51-2211D
	5	V51-2201F	V51-2202F	V51-2211F
	10	V51-2201H		V51-2211H
750	2,5	V51-2301D	V51-2302D	V51-2311D
	5	V51-2301F	V51-2302F	V51-2311F
	10	V51-2301H	V51-2302H	V51-2311H
	15			V51-2311J
1000	5	V51-2501F	V51-2502F	V51-2511F
	10	V51-2501H	V51-2502H	V51-2511H
	15			V51-2511J
	30			V51-2511L
1200	5	V51-2601F	V51-2602F	V51-2611F
	10	V51-2601H	V51-2602H	V51-2611H
	15			V51-2611J
	30			V51-2611L
1250	5	V51-2701F	V51-2702F	V51-2711F
	10	V51-2701H	V51-2702H	V51-2711H
	15			V51-2711J
	30			V51-2711L
1500	5	V51-2801F	V51-2802F	V51-2811F
	10	V51-2801H	V51-2802H	V51-2811H
	15			V51-2811J
	30			V51-2811L
1600	10	V51-2901H	V51-2902H	V51-2911H
	15			V51-2911J
	30			V51-2911L
2000	10	V51-3001H	V51-3002H	V51-3011H
	15			V51-3011J
	30			V51-3011L
2400	10	V51-3101H	V51-3102H	V51-3111H
	15			V51-3111J
	30			V51-3111L
2500	10	V51-3201H	V51-3202H	V51-3211H
	15			V51-3211J
	30			V51-3211L
3000	10	V51-3301H	V51-3302H	V51-3311H
	15			V51-3311J
	30			V51-3311L

Low-voltage current transformers for industrial applications with screwless connection technology

Plug-in current transformer with „Cage Clamp®“, UL certificated

ECTB 31.35	Busbar 1: 30 x 10 mm Busbar 2: 25 x 12 mm Round conductor: 25,7 mm Transformer width: 60 mm	Current range: 100 ... 750 A	Page: 222
ECTB 41.35	Busbar 1: 40 x 10 mm Busbar 2: 30 x 15 mm Round conductor: 31,8 mm Transformer width: 70 mm	Current range: 200 ... 750 A	Page: 223
ECTB 51.35	Busbar 1: 50 x 12 mm Busbar 2: 40 x 30 mm Round conductor: 43,7 mm Transformer width: 85 mm	Current range: 100 ... 1000 A	Page: 224
ECTB 61.35	Busbar 1: 63 x 10 mm Busbar 2: 50 x 30 mm Round conductor: 43,7 mm Transformer width: 95 mm	Current range: 200 ... 1500 A	Page: 225
ECTB 81.35	Busbar 1: 80 x 10 mm Busbar 2: 60 x 30 mm Round conductor: 54,7 mm Transformer width: 120 mm	Current range: 400 ... 2000 A	Page: 226
ECTB 101.35	Busbar 1: 100 x 10 mm Busbar 2: 80 x 30 mm Round conductor: 70 mm Transformer width: 130 mm	Current range: 400 ... 2000 A	Page: 227

Type „E“ denotes that the current transformers are suitable for tariff applications

ECTB 31.35

Plug-in current transformer - Tariff applications



Busbar 1	30 x 10 mm
Busbar 2	25 x 12 mm
Busbar 3	20 x 20 mm
Round conductor	25,7 mm
Transformer width	60 mm
Height	80,9 mm
Depth	52 mm

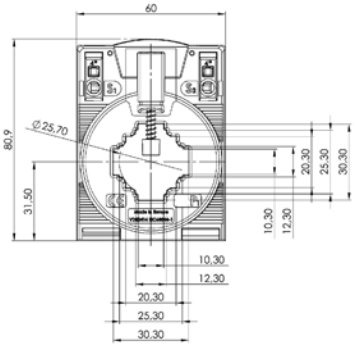

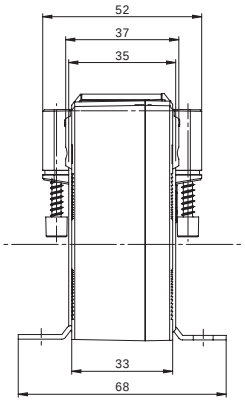

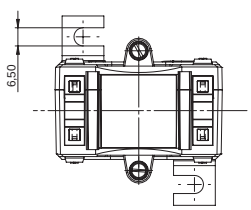

	Secondary current [A] / Class							
Primary current [A]	Burden [VA]	5 A Cl. 0,5 Art.-no.	5 A Cl. 0,5s Art.-no.	5 A Cl. 0,2 Art.-no.	5 A Cl. 0,2s Art.-no.	1 A Cl. 0,5 Art.-no.	1 A Cl. 0,5s Art.-no.	1 A Cl. 0,2 Art.-no.	1 A Cl. 0,2s Art.-no.
100	1,5	50-5001	50-5024	50-5046		50-7001	50-7024	50-7046	
	2,5	50-5002	50-5025			50-7002	50-7025		
125	1	50-5003	50-5026	50-5047	50-5063	50-7003	50-7026	50-7047	50-7061
	1,5	50-5004	50-5027			50-7004	50-7027	50-7048	
	2,5	50-5005	50-5028			50-7005	50-7028		
150	1,5	50-5006	50-5029	50-5049	50-5065	50-7006	50-7029	50-7049	50-7062
	2,5	50-5007	50-5030			50-7007	50-7030		
200	1,5	50-5008	50-5031	50-5050	50-5066	50-7008	50-7031	50-7050	50-7063
	2,5	50-5009	50-5032	50-5051		50-7009	50-7032	50-7051	50-7064
	5	50-5010	50-5033			50-7010	50-7033		
250	2,5	50-5011	50-5034	50-5052	50-5067	50-7011	50-7034	50-7052	50-7065
	5	50-5012	50-5035	50-5053		50-7012	50-7035		
300	2,5	50-5013	50-5036	50-5054	50-5068	50-7013	50-7036	50-7053	50-7066
	5	50-5014	50-5037	50-5055	50-5069	50-7014	50-7037	50-7054	
400	5	50-5015	50-5038	50-5056	50-5070	50-7015	50-7038	50-7055	50-7067
	10	50-5016				50-7016			
500	2,5	50-5017	50-5039	50-5057	50-5071	50-7017	50-7039	50-7056	50-7068
	2	50-5018	50-5040	50-5058	50-5072	50-7018	50-7040	50-7057	
	10	50-5019	50-5041			50-7019	50-7041		
600	5	50-5020	50-5042	50-5059	50-5073	50-7020	50-7042	50-7058	50-7069
	10	50-5021	50-5043	50-5060		50-7021	50-7043		
750	5	50-5022	50-5044	50-5061	50-5074	50-7022	50-7044	50-7059	50-7070
	10	50-5023	50-5045	50-5062	50-5075	50-7023	50-7045	50-7060	50-7071

		Art.-no.
	**Snap-on mounting CTB**	**55015**
	**Quick-Fix**	**55021**
	**Sealed shutter, type G**	**59057**

- UL certification; Certificate no.: 20100426-E336996
- World's first CT with screwless connection technology – „Cage Clamp®"
- Innovative time-saving connection of either solid or flexible secondary conductor not exceeding 4 mm² to be fitted either on the top or in front without ferrules
- Vibration and shock resistant
- Maintenance free gas-tight connection
- High current carrying capacity
- Low-voltage CT for maximum operating voltage of 1.2 kV; use in 690 V networks possible
- Higher isolation level 1.2/6/12 kV - Tested lightning impulse voltage for 690 V switchgear according IEC 61439-1 and -2.

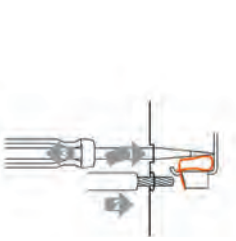

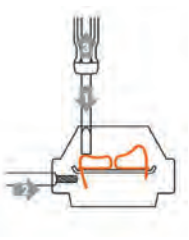





ECTB 41.35

Plug-in current transformer - Tariff applications



Busbar 1	40 x 10 mm
Busbar 2	30 x 15 mm
Round conductor	31,8 mm
Transformer width	70 mm
Height	91,15 mm
Depth	52 mm

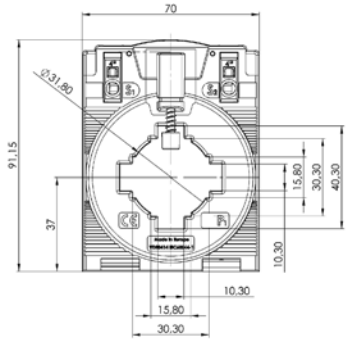

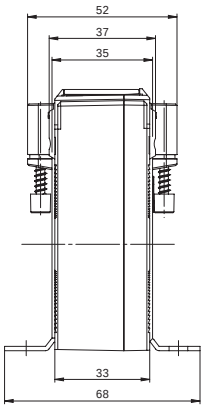

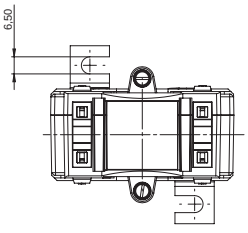

	Secondary current [A] / Class							
Primary current [A]	Burden [VA]	5 A Cl. 0,5 Art.-no.	5 A Cl. 0,5s Art.-no.	5 A Cl. 0,2 Art.-no.	5 A Cl. 0,2s Art.-no.	1 A Cl. 0,5 Art.-no.	1 A Cl. 0,5s Art.-no.	1 A Cl. 0,2 Art.-no.	1 A Cl. 0,2s Art.-no.
200	1,5	50-5101	50-5116			50-7101	50-7115		
	2,5	50-5102				50-7102			
250	2,5	50-5103	50-5117			50-7103	50-7116		
300	2,5	50-5104	50-5118			50-7104	50-7117		
	5	50-5105				50-7105			
400	5	50-5106	50-5119			50-7106	50-7118		
500	2,5	50-5107	50-5120	50-5128		50-7107	50-7119	50-7126	
	5	50-5108	50-5121			50-7108	50-7120		
	10	50-5109				50-7109			
600	2,5	50-5110	50-5122	50-5129	50-5134	50-7110	50-7121	50-7127	
	5	50-5111	50-5123	50-5130		50-7111	50-7122	50-7128	
	10	50-5112	50-5124			50-7112	50-7123		
750	2,5	50-5113	50-5125	50-5131	50-5135	50-7113	50-7124	50-7129	
	5	50-5114	50-5126	50-5132	50-5136	50-7114	50-7125		
	10	50-5115	50-5127	50-5133					

		Art.-no.
	**Snap-on mounting CTB**	**55015**
	**Quick-Fix**	**55021**
	**Sealed shutter, type G**	**59057**

- UL certification; Certificate no.: 20100426-E336996
- World's first CT with screwless connection technology – „Cage Clamp®"
- Innovative time-saving connection of either solid or flexible secondary conductor not exceeding 4 mm² to be fitted either on the top or in front without ferrules
- Vibration and shock resistant
- Maintenance free gas-tight connection
- High current carrying capacity
- Low-voltage CT for maximum operating voltage of 1.2 kV; use in 690 V networks possible
- Higher isolation level 1.2/6/12 kV - Tested lightning impulse voltage for 690 V switch-gear according IEC 61439-1 and -2.

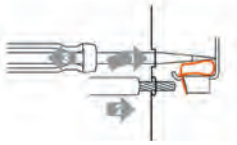

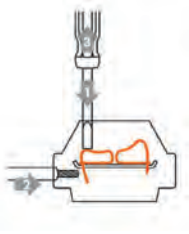



ECTB 51.35

Plug-in current transformer - Tariff applications



Busbar 1	50 x 12 mm
Busbar 2	40 x 30 mm
Round conductor	43,7 mm
Transformer width	85 mm
Height	105,25 mm
Depth	52 mm

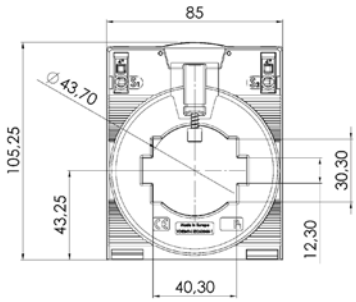

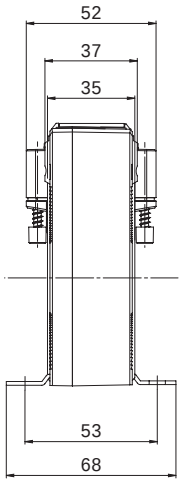

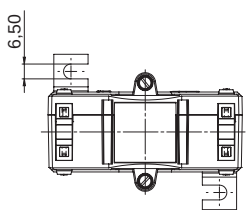

	Secondary current [A] / Class							
Primary current [A]	Burden [VA]	5 A Cl. 0,5 Art.-no.	5 A Cl. 0,5S Art.-no.	5 A Cl. 0,2 Art.-no.	5 A Cl. 0,2S Art.-no.	1 A Cl. 0,5 Art.-no.	1 A Cl. 0,5S Art.-no.	1 A Cl. 0,2 Art.-no.	1 A Cl. 0,2S Art.-no.
100	1,5	50-5201	50-5223			50-7201	50-7224		
125	1,5	50-5202	50-5224			50-7202	50-7225		
150	2,5	50-5203	50-5225			50-7203	50-7226		
200	1,5	50-5204	50-5226	50-5244		50-7204	50-7227	50-7246	
	2,5	50-5205	50-5227			50-7205	50-7228	50-7247	
250	1,5	50-5206	50-5228	50-5245	50-5258	50-7206	50-7229	50-7248	50-7260
	2,5	50-5207	50-5229	50-5246		50-7207	50-7230	50-7249	
	5					50-7208	50-7231		
300	2,5	50-5208	50-5230	50-5247	50-5259	50-7209	50-7232	50-7250	50-7261
	5	50-5209	50-5231	50-5248		50-7210	50-7233	50-7251	
400	2,5	50-5210	50-5232	50-5249	50-5260	50-7211	50-7234	50-7252	50-7262
	5	50-5211	50-5233	50-5250		50-7212	50-7235		
500	2,5	50-5212	50-5234	50-5251	50-5261	50-7213	50-7236	50-7253	50-7263
	5	50-5213	50-5235	50-5252	50-5262	50-7214	50-7237	50-7254	50-7264
	10	50-5214				50-7215			
600	2,5	50-5215	50-5236	50-5253	50-5263	50-7216	50-7238	50-7255	50-7265
	5	50-5216	50-5237	50-5254	50-5264	50-7217	50-7239	50-7256	
	10	50-5217	50-5238			50-7218	50-7240		
750	2,5	50-5218	50-5239	50-5255	50-5265	50-7219	50-7241	50-7257	50-7266
	5	50-5219	50-5240	50-5256	50-5266	50-7220	50-7242	50-7258	
	10	50-5220	50-5241			50-7221	50-7243		
1000	5	50-5221	50-5242	50-5257	50-5267	50-7222	50-7244	50-7259	50-7267
	10	50-5222	50-5243			50-7223	50-7245		

		Art.-no.
	**Quick-Fix**	**55021**
	**Sealed shutter, type H**	**59058**

- UL certification; Certificate no.: 20100426-E336996
- World's first CT with screwless connection technology – „Cage Clamp®"
- Innovative time-saving connection of either solid or flexible secondary conductor not exceeding 4 mm² to be fitted either on the top or in front without ferrules
- Vibration and shock resistant
- Maintenance free gas-tight connection
- High current carrying capacity
- Low-voltage CT for maximum operating voltage of 1.2 kV; use in 690 V networks possible
- Higher isolation level 1.2/6/12 kV - Tested lightning impulse voltage for 690 V switch-gear according IEC 61439-1 and -2.

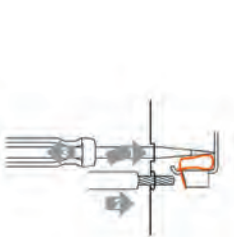

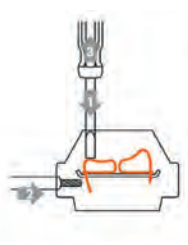





ECTB 61.35

Plug-in current transformer - Tariff applications



Busbar 1	63 x 10 mm
Busbar 2	50 x 30 mm
Round conductor	43,7 mm
Transformer width	95 mm
Height	114,86 mm
Depth	52 mm

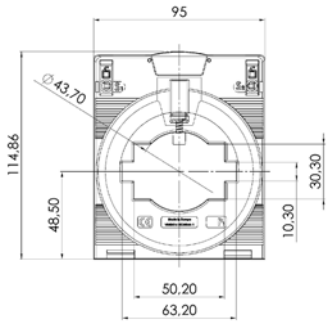

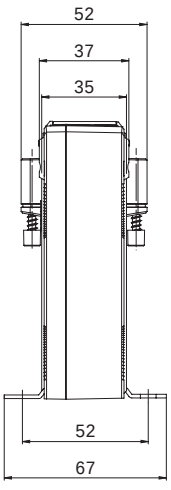

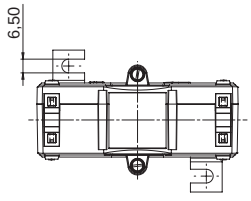

	Secondary current [A] / Class							
Primary current [A]	Burden [VA]	5 A Cl. 0,5 Art.-no.	5 A Cl. 0,5s Art.-no.	5 A Cl. 0,2 Art.-no.	5 A Cl. 0,2s Art.-no.	1 A Cl. 0,5 Art.-no.	1 A Cl. 0,5s Art.-no.	1 A Cl. 0,2 Art.-no.	1 A Cl. 0,2s Art.-no.
200	1,5	50-5301	50-5326	50-5350		50-7301	50-7326	50-7351	
	2,5	50-5302	50-5327	50-5351		50-7302	50-7327	50-7352	
250	1,5	50-5303	50-5328	50-5352		50-7303	50-7328	50-7353	50-7373
	2,5	50-5304	50-5329	50-5353		50-7304	50-7329	50-7354	
	5	50-5305	50-5330			50-7305	50-7330		
300	2,5	50-5306	50-5331	50-5354	50-5365	50-7306	50-7331	50-7355	50-7374
	5	50-5307	50-5332	50-5355		50-7307	50-7332	50-7356	
400	2,5	50-5308	50-5333	50-5356	50-5366	50-7308	50-7333	50-7357	50-7375
	5	50-5309	50-5334	50-5357		50-7309	50-7334	50-7358	
500	2,5	50-5310	50-5335	50-5358	50-5367	50-7310	50-7335	50-7359	50-7376
	5	50-5311	50-5336	50-5359	50-5368	50-7311	50-7336	50-7360	50-7377
600	2,5	50-5312	50-5337	50-5360	50-5369	50-7312	50-7337	50-7361	50-7378
	5	50-5313	50-5338	50-5361	50-5370	50-7313	50-7338	50-7362	50-7379
750	5	50-5314	50-5339	50-5362	50-5371	50-7314	50-7339	50-7363	50-7380
	10	50-5315	50-5340			50-7315	50-7340		
800	5	50-5316	50-5341	50-5363		50-7316	50-7341	50-7364	
	10	50-5317				50-7317	50-7342		
1000	5	50-5318	50-5342	50-5364		50-7318	50-7343	50-7365	
	10	50-5319	50-5343			50-7319	50-7344	50-7366	
1200	5	50-5320	50-5344			50-7320	50-7345	50-7367	
	10	50-5321	50-5345			50-7321	50-7346	50-7368	
1250	5	50-5322	50-5346			50-7322	50-7347	50-7369	
	10	50-5323	50-5347			50-7323	50-7348	50-7370	
1500	5	50-5324	50-5348			50-7324	50-7349	50-7371	
	10	50-5325	50-5349			50-7325	50-7350	50-7372	

		Art.-no.
	**Quick-Fix**	**55021**
	**Sealed shutter, type J**	**59059**

- UL certification; Certificate no.: 20100426-E336996
- World's first CT with screwless connection technology – „Cage Clamp®"
- Innovative time-saving connection of either solid or flexible secondary conductor not exceeding 4 mm² to be fitted either on the top or in front without ferrules
- Vibration and shock resistant
- Maintenance free gas-tight connection
- High current carrying capacity
- Low-voltage CT for maximum operating voltage of 1.2 kV; use in 690 V networks possible
- Higher isolation level 1.2/6/12 kV - Tested lightning impulse voltage for 690 V switchgear according IEC 61439-1 and -2.

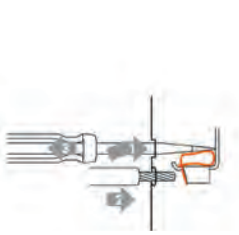



ECTB 81.35

Plug-in current transformer - Tariff applications



Busbar 1	80 x 10 mm
Busbar 2	60 x 30 mm
Round conductor	54,7 mm
Transformer width	120 mm
Height	134,66 mm
Depth	52 mm

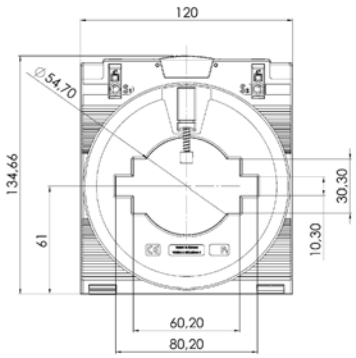

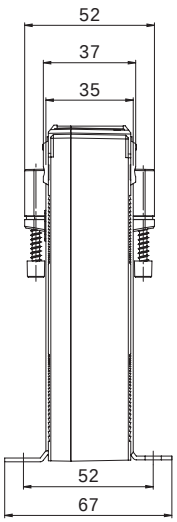

	Secondary current [A] / Class							
Primary current [A]	Burden [VA]	5 A Cl. 0,5 Art.-no.	5 A Cl. 0,5s Art.-no.	5 A Cl. 0,2 Art.-no.	5 A Cl. 0,2s Art.-no.	1 A Cl. 0,5 Art.-no.	1 A Cl. 0,5s Art.-no.	1 A Cl. 0,2 Art.-no.	1 A Cl. 0,2s Art.-no.
400	2,5	50-5401	50-5430	50-5457		50-7401	50-7430	50-7459	
500	2,5	50-5402	50-5431	50-5458	50-5482	50-7402	50-7431	50-7460	50-7484
	5	50-5403				50-7403	50-7432		
600	2,5	50-5404	50-5432	50-5459	50-5483	50-7404	50-7433	50-7461	50-7485
	5	50-5405	50-5433	50-5460	50-5484	50-7405	50-7434	50-7462	50-7486
750	2,5	50-5406	50-5434	50-5461	50-5485	50-7406	50-7435	50-7463	50-7487
	5	50-5407	50-5435	50-5462	50-5486	50-7407	50-7436	50-7464	50-7488
	10	50-5408				50-7408	50-7437		
800	2,5	50-5409	50-5436	50-5463	50-5487	50-7409	50-7438	50-7465	50-7489
	5	50-5410	50-5437	50-5464	50-5488	50-7410	50-7439	50-7466	50-7490
	10	50-5411	50-5438			50-7411	50-7440		
1000	5	50-5412	50-5439	50-5465	50-5489	50-7412	50-7441	50-7467	50-7491
	10	50-5413	50-5440	50-5466		50-7413	50-7442	50-7468	
	15	50-5414	50-5441			50-7414	50-7443		
1200	5	50-5415	50-5442	50-5467	50-5490	50-7415	50-7444	50-7469	50-7492
	10	50-5416	50-5443	50-5468		50-7416	50-7445	50-7470	50-7493
	15	50-5417	50-5444	50-5469		50-7417	50-7446	50-7471	
1250	5	50-5418	50-5445	50-5470	50-5491	50-7418	50-7447	50-7472	50-7494
	10	50-5419	50-5446	50-5471		50-7419	50-7448	50-7473	50-7495
	15	50-5420	50-5447	50-5472		50-7420	50-7449	50-7474	
1500	5	50-5421	50-5448	50-5473	50-5492	50-7421	50-7450	50-7475	50-7496
	10	50-5422	50-5449	50-5474		50-7422	50-7451	50-7476	50-7497
	15	50-5423	50-5450	50-5475		50-7423	50-7452	50-7477	
1600	5	50-5424	50-5451	50-5476	50-5493	50-7424	50-7453	50-7478	50-7498
	10	50-5425	50-5452	50-5477	50-5494	50-7425	50-7454	50-7479	50-7499
	15	50-5426	50-5453	50-5478		50-7426	50-7455	50-7480	
2000	5	50-5427	50-5454	50-5479	50-5495	50-7427	50-7456	50-7481	50-7500
	10	50-5428	50-5455	50-5480	50-5496	50-7428	50-7457	50-7482	50-7501
	15	50-5429	50-5456	50-5481		50-7429	50-7458	50-7483	

		Art.-no.
	**Quick-Fix**	**55021**
	**Sealed shutter, type J**	**59059**

- UL certification; Certificate no.: 20100426-E336996
- World's first CT with screwless connection technology – „Cage Clamp®"
- Innovative time-saving connection of either solid or flexible secondary conductor not exceeding 4 mm² to be fitted either on the top or in front without ferrules
- Vibration and shock resistant; high current carrying capacity; maintenance free gas-tight connection
- Low-voltage CT for maximum operating voltage of 1.2 kV; use in 690 V networks possible
- Higher isolation level 1.2/6/12 kV - Tested lightning impulse voltage for 690 V switchgear according IEC 61439-1 and -2.

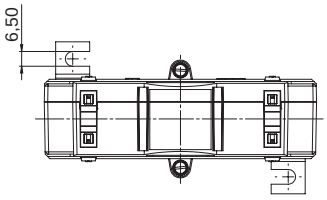

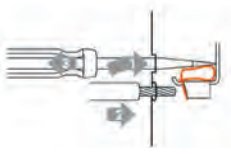

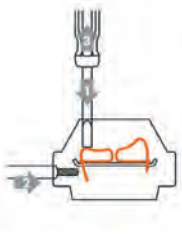





ECTB 101.35

Plug-in current transformer - Tariff applications

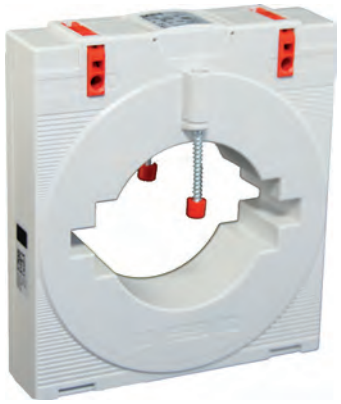

Busbar 1	100 x 10 mm
Busbar 2	80 x 30 mm
Round conductor	70 mm
Transformer width	130 mm
Height	147,49 mm
Depth	52 mm

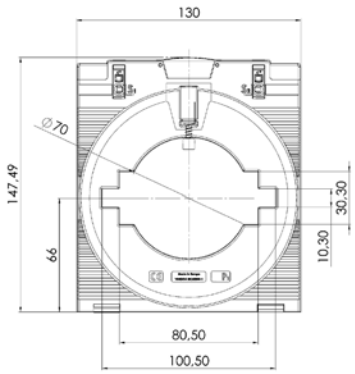

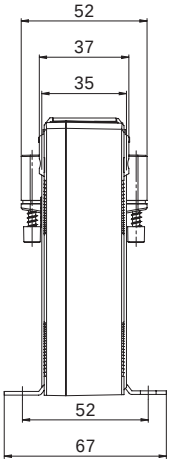

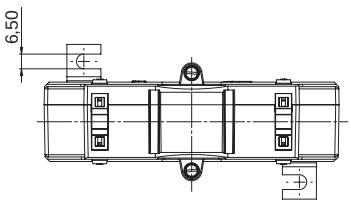

	Secondary current [A] / Class							
Primary current [A]	Burden [VA]	5 A Cl. 0,5 Art.-no.	5 A Cl. 0,5s Art.-no.	5 A Cl. 0,2 Art.-no.	5 A Cl. 0,2s Art.-no.	1 A Cl. 0,5 Art.-no.	1 A Cl. 0,5s Art.-no.	1 A Cl. 0,2 Art.-no.	1 A Cl. 0,2s Art.-no.
400	2,5	50-5601				50-7601			
500	2,5	50-5602				50-7602	50-7629		
600	2,5	50-5603	50-5629			50-7603	50-7630		
	5	50-5604				50-7604	50-7631		
750	2,5	50-5605	50-5630			50-7605	50-7632		
	5	50-5606	50-5631			50-7606	50-7633		
	10	50-5607				50-7607	50-7634		
800	2,5	50-5608	50-5632			50-7608	50-7635	50-7656	
	5	50-5609	50-5633			50-7609	50-7636		
	10	50-5610				50-7610	50-7637		
1000	5	50-5611	50-5634	50-5651		50-7611	50-7638	50-7657	50-7671
	10	50-5612	50-5635			50-7612	50-7639		
	15	50-5613				50-7613	50-7640		
1200	5	50-5614	50-5636	50-5652	50-5665	50-7614	50-7641	50-7658	50-7672
	10	50-5615	50-5637	50-5653		50-7615	50-7642	50-7659	
	15	50-5616	50-5638			50-7616	50-7643		
1250	5	50-5617	50-5639	50-5654	50-5666	50-7617	50-7644	50-7660	50-7673
	10	50-5618	50-5640	50-5655		50-7618	50-7645	50-7661	
	15	50-5619	50-5641			50-7619	50-7646		
1500	5	50-5620	50-5642	50-5656	50-5667	50-7620	50-7647	50-7662	50-7674
	10	50-5621	50-5643	50-5657		50-7621	50-7648	50-7663	
	15	50-5622	50-5644	50-5658		50-7622	50-7649	50-7664	
1600	5	50-5623	50-5645	50-5659	50-5668	50-7623	50-7650	50-7665	50-7675
	10	50-5624	50-5646	50-5660	50-5669	50-7624	50-7651	50-7666	50-7676
	15	50-5625	50-5647	50-5661		50-7625	50-7652	50-7667	
2000	5	50-5626	50-5648	50-5662	50-5670	50-7626	50-7653	50-7668	50-7677
	10	50-5627	50-5649	50-5663	50-5671	50-7627	50-7654	50-7669	50-7678
	15	50-5628	50-5650	50-5664		50-7628	50-7655	50-7670	

		Art.-no.
	**Quick-Fix**	**55021**
	**Sealed shutter, type J**	**59059**

- UL certification; Certificate no.: 20100426-E336996
- World's first CT with screwless connection technology – „Cage Clamp®"
- Innovative time-saving connection of either solid or flexible secondary conductor not exceeding 4 mm² to be fitted either on the top or in front without ferrules
- Vibration and shock resistant
- Maintenance free gas-tight connection
- High current carrying capacity
- Low-voltage CT for maximum operating voltage of 1.2 kV; use in 690 V networks possible
- Higher isolation level 1.2/6/12 kV - Tested lightning impulse voltage for 690 V switchgear according IEC 61439-1 and -2

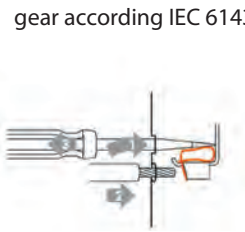



Low-voltage current transformers for tariff applications

Wound current transformer

EWSK 31.5 Transformer width: 115 mm Current range: 25 ... 150 A Page: 229

Summation current transformer

ESUSK Inputs: 2 ... 8 pcs. Current range: 5 A Page: 230
Transformer width: 156 mm

Type „E“ denotes that the current transformers are suitable for tariff applications

EWSK 31.5

Wound current transformer – Tariff applications



Transformer width	70 mm
Height	100 mm
Depth	115 mm

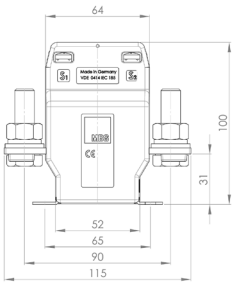

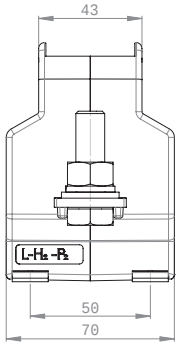

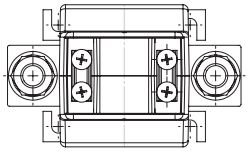

	Secondary current [A] / Class				
Primary current [A]	Burden [VA]	5 A Cl. 0,5 Art.-no.	5 A Cl. 0,5s Art.-no.	5 A Cl. 0,2 Art.-no.	1 A Cl. 0,5 Art.-no.	1 A Cl. 0,2 Art.-no.
25	2,5	33547	33583	33511	33747	33711
	5	33548	33584	33512	33748	33712
	10	33549	33585	33513	33749	33713
	15	33550	33586		33750	
30	2,5	33551	33587	33515	33751	33715
	5	33552	33588	33516	33752	33716
	10	33553	33589	33517	33753	33717
	15	33554	33590		33754	
40	2,5	33555	33591	33519	33755	33719
	5	33556	33592	33520	33756	33720
	10	33557	33593	33521	33757	33721
	15	33558	33594		33758	
50	2,5	33559	33595	33523	33759	33723
	5	33560	33596	33524	33760	33724
	10	33561	33597	33525	33761	33725
	15	33562	33598		33762	
60	2,5	33563	33599	33527	33763	33727
	5	33564	33600	33528	33764	33728
	10	33565	33601	33529	33765	33729
	15	33566	33602		33766	
75	2,5	33567	33603	33531	33767	33731
	5	33568	33604	33532	33768	33732
	10	33569	33605	33533	33769	33733
	15	33570	33606		33770	
100	2,5	33571	33607	33535	33771	33735
	5	33572	33608	33536	33772	33736
	10	33573	33609	33537	33773	33737
	15	33574	33610		33774	
150	2,5	33575	33611	33539	33775	33739
	5	33576	33612	33540	33776	33740
	10	33577	33613	33541	33777	33741
	15	33578	33614		33778	

		Art.-no.
	**Snap-on mounting**	**–**
	**Sealed shutter, type F**	**59045**

ESUSK 2...8

Summation current transformer – Tariff applications



Transformer width	156 mm
Height	140 mm
Depth	65 mm

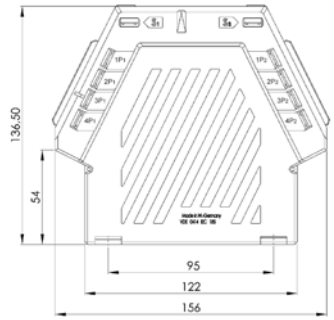

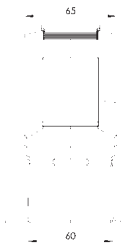

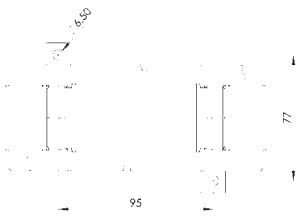

	Secondary current [A] / Class		
Inputs	Primary current [A]	Burden [VA]	5 A Cl. 0,2 Art.-no.
2	5	5	40511
		10	40512
3		5	40513
		10	40514
4		5	40515
		10	40516
5		5	40517
		10	40518
6		5	40519
		10	40520
7		5	40521
		10	40522
8		5	40523
		10	40524

		Art.-no.
	**Snap-on mounting**	**–**
	**Sealed shutter, type B**	**59041 primary**
	**Sealed shutter, type C**	**59042 secondary**

Connection example for different ratios:

AK-AL	=	1000/5
BK-BL	=	800/5
CK-CL	=	600/5
DK-DL	=	400/5
EK-EL	=	400/5
FK-FL	=	300/5
GK-GL	=	300/5
HK-HL	=	300/5

Connection diagram

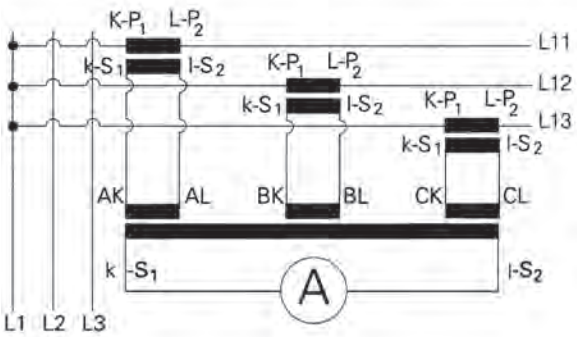

Low-voltage current transformers for power quality applications up to 20 kHz and screwless connection system

Plug-in current transformers

XCTB 31.35	Busbar 1: 30 x 10 mm Busbar 2: 25 x 12 mm Round conductor: 25,7 mm Transformer width: 60 mm	Current range: 50 ... 750 A	Page: 237
XCTB 41.35	Busbar 1: 40 x 10 mm Busbar 2: 30 x 15 mm Round conductor: 31,8 mm Transformer width: 70 mm	Current range: 75 ... 1000 A	Page: 239
XCTB 51.35	Busbar 1: 50 x 12 mm Busbar 2: 40 x 30 mm Round conductor: 43,7 mm Transformer width: 85 mm	Current range: 100 ... 1250 A	Page: 241
XCTB 61.35	Busbar 1: 63 x 10 mm Busbar 2: 50 x 30 mm Round conductor: 43,7 mm Transformer width: 95 mm	Current range: 200 ... 1600 A	Page: 243
XCTB 81.35	Busbar 1: 80 x 10 mm Busbar 2: 60 x 30 mm Round conductor: 54,7 mm Transformer width: 120 mm	Current range: 400 ... 2000 A	Page: 245
XCTB 101.35	Busbar 1: 100 x 10 mm Busbar 2: 80 x 30 mm Round conductor: 70 mm Transformer width: 130 mm	Current range: 400 ... 2000 A	Page: 247

Split-core current transformers for power quality applications up to 20 kHz

XKBU	Type XKBU 23:	Current range: 250 ... 400 A	Page: 249
	Type XKBU 58:	Current range: 250 ... 1000 A	Page : 250
	Type XKBU 812:	Current range: 250 ... 1500 A	Page: 250
	Type XKBU 816:	Current range: 1000 ... 2500 A	Page: 250
XKBR	Type XKBR 18S:	Current range: 200 ... 250 A	Page: 251
	Type XKBR 18:	Current range: 200 A	Page: 251
	Type XKBR 18L:	Current range: 100 ... 250 A	Page: 251
	Type XKBR 28:	Current range: 200 ... 500 A	Page: 251
	Type XKBR 32:	Current range: 300 ... 600 A	Page: 251
	Type XKBR 42:	Current range: 250 ... 1000 A	Page: 251
	Type XKBR 42L:	Current range: 250 ... 1000 A	Page: 251
	Type XKBR 44:	Current range: 250 ... 1000 A	Page: 251

New measuring requirements for inductive current transformers in the low-voltage range

(X-Type-series: XCTB, XKBR, XKBU)

Changes to the structure of generation and consumption

Over the last few years, the proportion of renewable energy in Germany has grown massively. Wind, biomass, photovoltaic and hydroelectric plants now make up approximately 30% of the country's energy mix.
Unlike in conventional nuclear or coal-fired power stations, where all synchronous generators are used to produce electricity, here inverters or frequency converters are used. As such, it is not always possible to achieve a clean sine wave.
The distortions are caused by the switching semiconductor elements in the inverter. Harmonics generated in this way are whole multiples of the first harmonic and can extend far into the single-digit kilohertz range. The total harmonic distortion (THD) factor specifies the undesirable distortion ratio of the 50 Hz sinusoidal oscillation and regularly reaches between 10 and 30%.
In addition to the harmonics produced by inverters on the generator side, there have also been changes on the consumer side in recent years. Non-linear consumers such as LED or energy-saving lamps are pushing linear ones, like traditional incandescent bulbs, out of our daily lives almost completely.
Plug-in power supply units for mobile phones and laptops are no longer made from small transformers either, but from semiconductor circuits known as switched-mode power supplies. It would not be possible to create such small, light power supply units any other way. But these benefits are set against one big disadvantage: the current is drawn from the public grid not as a sinusoidal waveform, but in pulses. The figure below illustrates this:

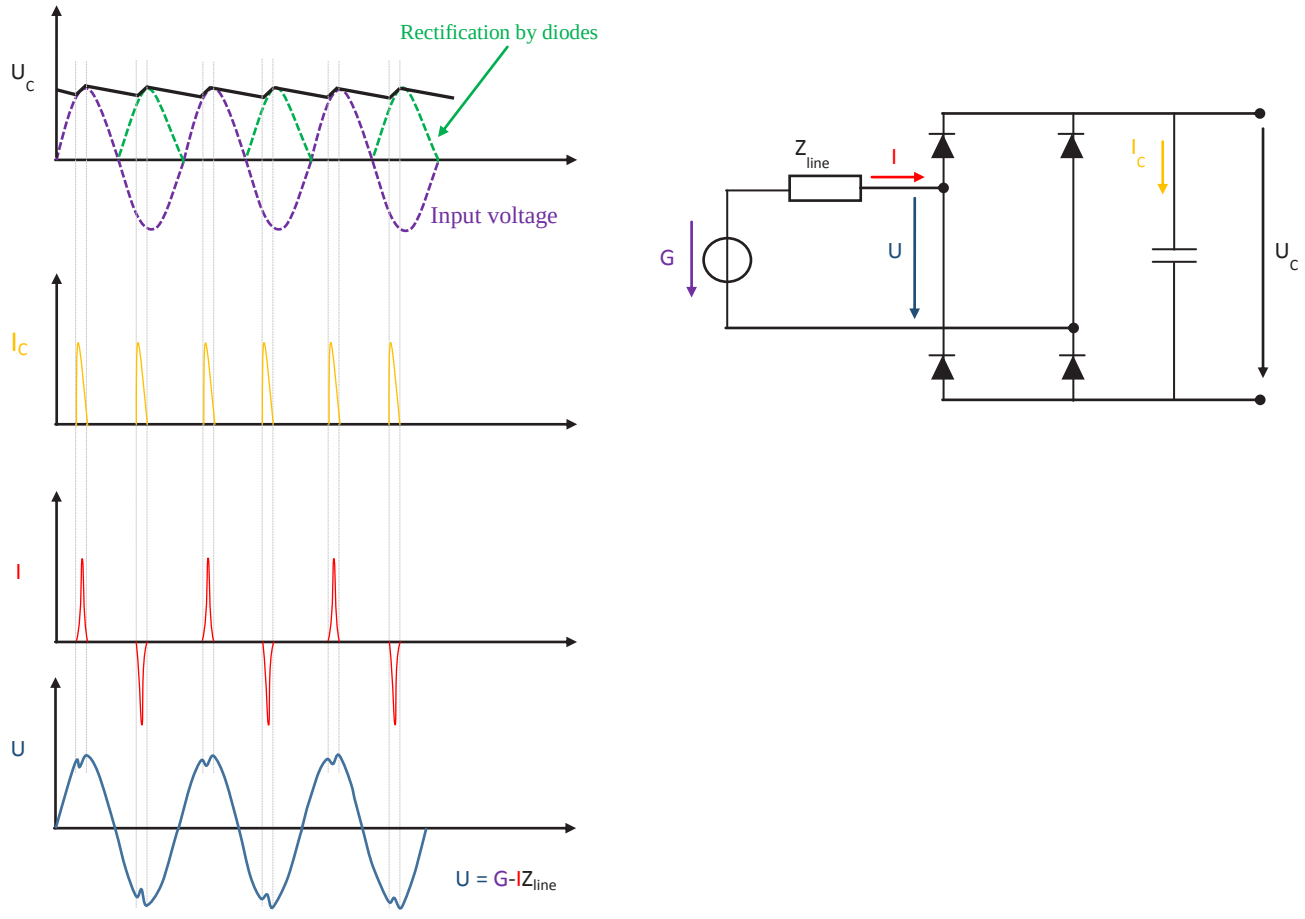

Figure 1: Bridge rectifier with pulsed current draw

The filter capacitor shown in the diagram not only smooths the required output voltage, it is also recharged in pulses by the rectifier diodes. These steep current peaks generate reactive power on the one hand, and harmonics on the other.

[1]The THD is the ratio of the harmonic component to the first harmonic

Standards regulate limit values – but not always!

There is already a corresponding set of international norms that limits harmonic currents in end devices with a power consumption > 75 W. Devices under 75 W are not currently covered by standards. In the interests of keeping costs down, manufacturers do not usually implement filter measures or complex power factor correction. The EN 61000-3-2 set of standards does not come into play until the 25 W mark for lamps either; for example, where energy-saving lamps are concerned, THDI values of 30 to 70% and higher are not uncommon during warm-up and in continuous duty. It should also be noted that, even when they do kick in, the standards only define limit values up to 2 kHz. As a result, manufacturers have hardly taken interference suppression into account at all when developing electronic products for the frequency range > 2 kHz in the past.
In addition, more and more electrical motors with variable-frequency drive technology are being used in the industrial sector. Today already, the percentage of electrical motors sold that have a frequency-controlled drive stands at around 40%. The majority of these motors utilise pulse width modulation technology, which can generate THDI values in the range from 100 to 120%. Clean sine waves are almost impossible to identify at these values.

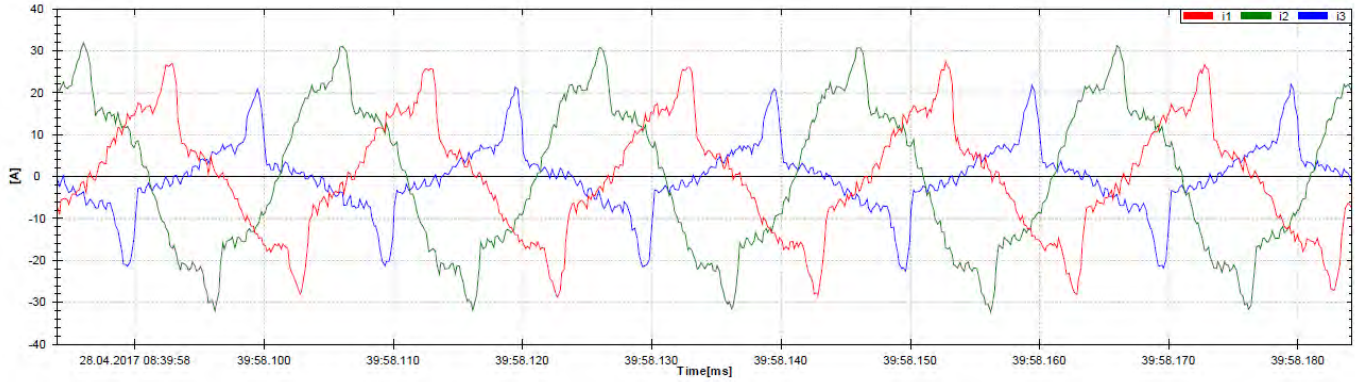

Figure 2: Flow of current for an industrial customer on the low-voltage grid

Power electronics have so many benefits that we can categorically state there will be no return to linear consumers such as the traditional incandescent bulb. In fact, we can expect harmonic loads to increase even further in European grids, due to the development of alternative sources of energy and the growth of non-linear consumers. We should also bear in mind that having lots of consumers that are not regulated by standards could cause considerable interference overall. Filter systems have already had to be installed in office buildings where just computers, telephone systems and energyefficient bulbs are used, in order to bring problems with harmonics under control.

Effects of harmonics

Grid operators are primarily interested in the economic effects of harmonics. When it comes to harmonic currents, the most important phenomena are as follows[2]:

- Overloading of neutral conductors
- Overheating of transformers
- False tripping of circuit breakers/miniature circuit breakers
- Overstressing of power-factor correction capacitors
- Skin effects

If the distortion level in the supply voltage reaches a value > 10%, this shortens the lifetime of devices considerably. This reduction is estimated as follows:

- 32.5% for 1-phase machines
- 18% for 3-phase machines
- 5% for transformers.

To maintain the lifetime expected from the nominal load, the devices named above must be over-dimensioned.

[2] Schneider Electric Wiki (accessed 09/01/2018) http://de.electricalinstallation.org/dewiki/Wirtschaftliche_Auswirkungen#St.C3.B6rungsausl.C3.B6sung_und_Anlagenausfall

Standard regulation for distribution network operators

The latest draft of VDE-AR-N 41001 deals with this matter. Point 5.4.4.3 of this regulation refers to harmonic currents of up to **9 kHz** that need to be monitored and covers not only **generating plants**, but also **receiving plants** and **storage systems**. The customer should liaise with the grid operator and take action to reduce harmonic currents – particularly by constructing filter circuits. In future we can assume, therefore, that current measurements up to 9 kHz will be taken continuously across the whole low-voltage network.
Looking at the overall picture of the rise in distributed energy generation plants and non-linear consumers, we can see this is a very sensible move. Grid operators and their customers will need measuring equipment that can accurately record harmonic currents of up to 9 kHz.

Current transformers up to 20 kHz

MBS AG offers the full series of XCTB current transformers for measurements up to 20 kHz. These products guarantee high-precision transmission up to 20 kHz on the one hand, and are designed to withstand the thermal demands of running in networks subject to harmonics on the other.

Output signals are 1 or 5 A, just like with the familiar inductive current transformer to IEC 61869-2. Performance data corresponds to standard values too. As a result, these transformers can also be used in conventional 50 Hz applications. An additional rating plate defines the frequency transmission behaviour.

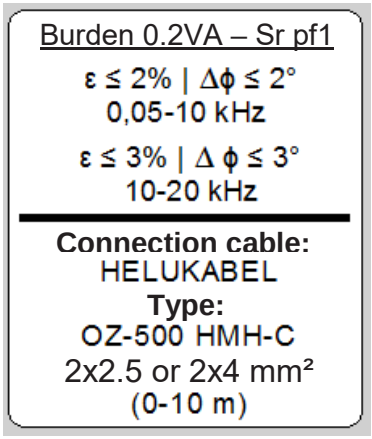

Figure 4: Frequency transmission behaviour

Since the connecting cable affects the load and the transmission behaviour more if it is long, we recommend the OZ-500 HMH-C cable from Helukabel GmbH (2 x 2.5 mm2 or 2 x 4 mm2 version) for harmonic measurements up to 20 kHz.

MBS AG carries out its accuracy tests using this type of cable too. The customer can now benefit from a consistent measuring chain and reliable measured values in the frequency range up to 20 kHz.
What's more, the X-Type series offers improved insulation resistance to voltage peaks and can also be used for operating voltages up to 1000 V in accordance with an insulation rating of 1.2 / 6 / – kV.

[1] TAR low voltage (E VDE-AR-N 4100): draft published 28/04/2017

Typical frequency responses of the XCTB with resistive load

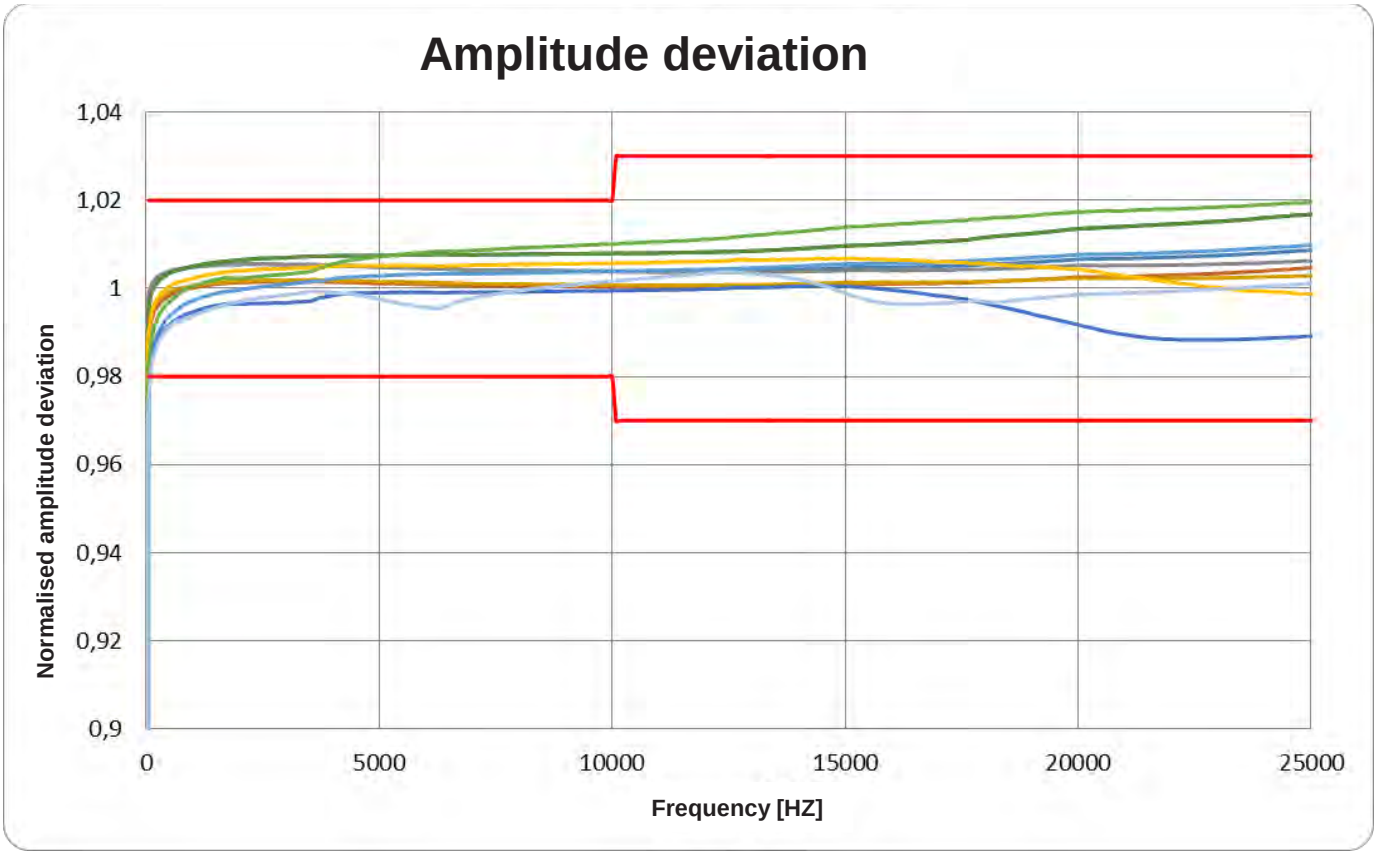

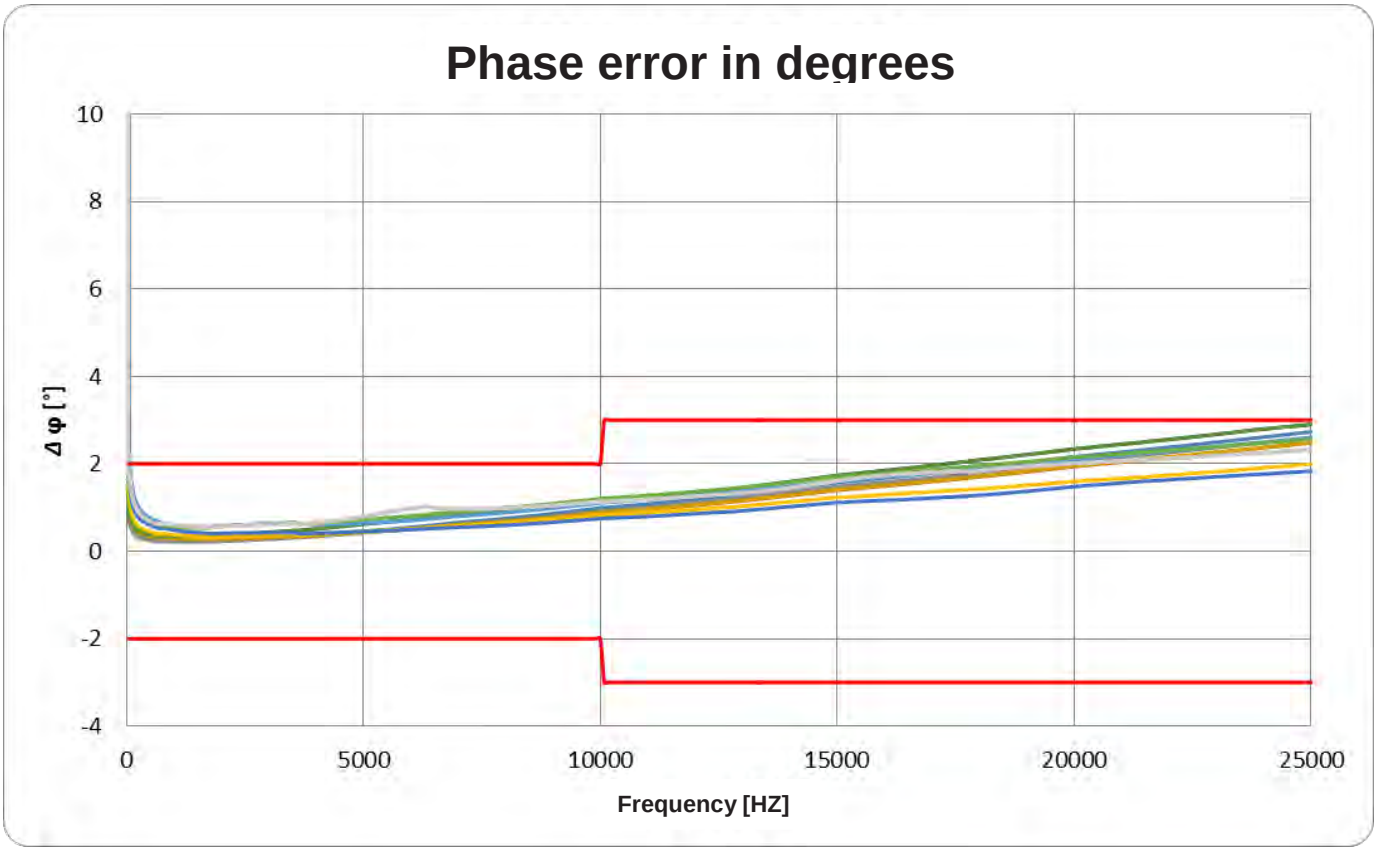

Plug-in current transformers with screwless “Cage Clamp®” connection system, for power quality applications up to 20 kHz



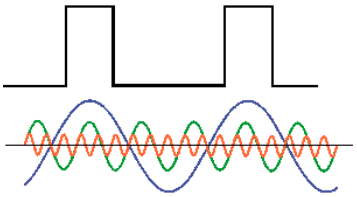





Screwless connection system thanks to “Cage Clamp®” spring-type terminal (front or top)

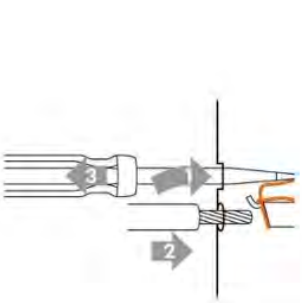

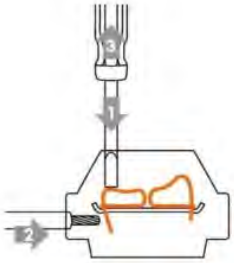

Further information:

- Innovative, time-saving connection option (front or top) for solid and flexible conductors, max. 4 mm² – no need for ferrule terminals
- Resistant to shock and vibration
- Maintenance-free, gas-tight connection
- High current-carrying capacity and high mechanical retention forces
- Low-voltage current transformers for max. operating voltages U_m up to 1.2 kV, can be used in 690 V networks
- Insulation test voltage: 6 kV, U_{rms}, 50 Hz, 1 min
- Higher insulation level 1.2/6/12 kV – tested lightning impulse voltage for 690 V systems acc. to IEC 61439-1 and -2
- Available in nominal current ranges 50…2000 A
- Accuracy classes @ 50 Hz: 1; 0.5; 0.5S, 0.2 and 0.2S
- Connecting cable for harmonic measurements: HELUKABEL type: OZ-500 HMH-C with 2x2.5 or 2x4 mm² (0–10 m)
- Harmonic measurements with load 0.2 VA – Sr pf1 (power factor 1)
- Measuring accuracy up to 20 kHz: $\varepsilon \leq 2\% \mid \Delta\phi \leq 2°$@ 0.05–10 kHz || $\varepsilon \leq 3\% \mid \Delta\phi \leq 3°$@ 10–20 kHz
- Can be continuously overloaded with 120% of the primary nominal voltage
- Suitable for networks subject to harmonics with fundamental frequencies of 50 Hz or 60 Hz
- Insulation class: E
- Working temperature range: -5 °C < T < +50 °C
- Storage temperature range: -25 °C < T < +70 °C
- Unbreakable plastic housing made of polycarbonate, self-extinguishing, flame resistant
- Packing unit: 1 piece
- Customs tariff number: 85043129



XCTB 31.35

Plug-in current transformers

Busbar 1	30 x 10 mm
Busbar 2	25 x 12 mm
Busbar 3	20 x 20 mm
Round conductor	25.7 mm
Width	60 mm
Height	80.9 mm
Depth	52 mm

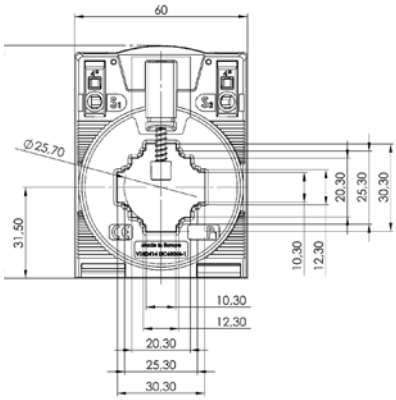

	Secondary current (A) / Accuracy class					
Primary current (A)	Burden (VA)	5A Cl. 1 Art.- no.	5A Cl. 0.5 Art.-no.	5A Cl. 0.5S Art.-no.	5A Cl. 0.2 Art. no.	5A CL. 0.2S Art.-no.
60	1.25	51-0001				
75	2.5	51-0002				
80	2.5	51-0003				
100	1.5		51-0014	51-0033	51-0052	
	2.5	51-0004	51-0015	51-0034		
125	1		51-0016	51-0035	51-0053	51-0067
	1.5		51-0017	51-0036	51-0054	51-0068
	2.5	51-0005	51-0018	51-0037		
150	1.5		51-0019	51-0038	51-0055	51-0069
	2.5		51-0020	51-0039		
	5	51-0006				
200	1.5		51-0021	51-0040	51-0056	
	2.5		51-0022	51-0041	51-0057	
	5	51-0007	51-0023	51-0042	51-0070	
250	2.5		51-0024	51-0043	51-0058	51-0071
	5		51-0025	51-0044	51-0059	51-0008
300	2.5		51-0026	51-0045	51-0060	51-0072
	5	51-0009	51-0027	51-0046	51-0061	51-0073
400	5	51-0010	51-0028	51-0047	51-0062	51-0074
500	2.5		51-0029	51-0048	51-0063	51-0075
	5	51-0011	51-0030	51-0049	51-0064	51-0076
600	5	51-0012	51-0031	51-0050	51-0065	51-0077
750	5	51-0013	51-0032	51-0051	51-0066	51-0078

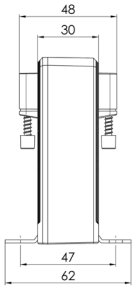

		Art.-no.
	**Snap-on mounting XCTB**	**55015**
	**Quick-Fix**	**55021**
	**Sealed shutter, type G**	**59057**

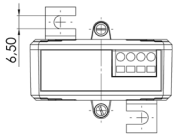

- Measuring accuracy up to 20 kHz: ε ≤ 2 % | ΔΦ ≤ 2° @ 0,05-10 kHz
  ε ≤ 3 % | ΔΦ ≤ 3° @ 10-20 kHz
- Connection cable for harmonic measurements: HELUKABEL Typ: OZ-500 HMH-C with 2x2,5 mm² or 2x4 mm² (0-10 m)
- Harmonic measurements with rated power 0,2 VA - Sr pf 1 (Power factor 1)

Technical data:
Therm. nominal continuous current Icth: 1.2 x Ipr
Therm. nominal short-time current Ith: 60 x Ipr, 1 s
Max. operating voltage Um: 1.2 kV, Urms
Insulation test voltage: 6 kV, Urms., 50 Hz, 1 min
Lightning impulse voltage: 12 kV, 1.2/50 µs
Nominal frequency: 50/60 Hz
Technical standards applied: DIN EN 61869, Part 1 + 2
Harmonic measurements with load 0.2 VA – Sr pf1







XCTB 31.35

Plug-in current transformers

Busbar 1	30 x 10 mm
Busbar 2	25 x 12 mm
Busbar 3	20 x 20 mm
Round conductor	25.7 mm
Width	60 mm
Height	80.9 mm
Depth	52 mm

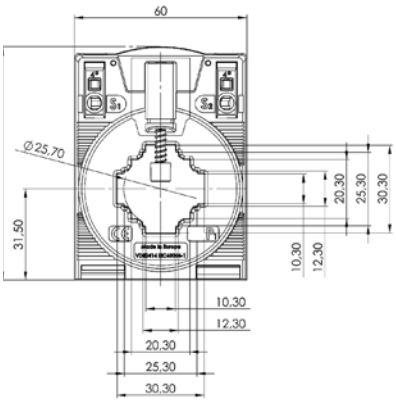

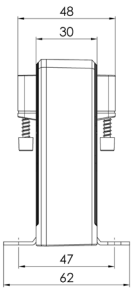

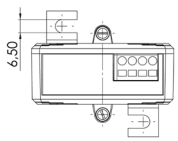

	Secondary current (A) / Accuracy class				
Primary current (A)	Burden (VA)	1 A Cl. 1 Art.-no.	1 A Cl. 0.5 Art.-no.	1 A Cl. 0.5S Art.-no.	1 A Cl. 0.2 Art.no.	1 A Cl. 0.2S Art.no.
50	0.5	51-2001				
60	1.25	51-2002				
75	2.5	51-2003				
80	2.5	51-2004				
100	1.5		51-2015	51-2034	51-2053	
	2.5	51-2005	51-2016	51-2035		
125	1		51-2017	51-2036	51-2054	
	1.5		51-2018	51-2037	51-2055	51-2067
	2.5	51-2006	51-2019	51-2038		
150	1.5		51-2020	51-2039	51-2056	51-0068
	2.5		51-2021	51-2040		
	5	51-2007				
200	1.5		51-2022	51-2041	51-2057	51-2069
	2.5		51-2023	51-2042	51-2058	51-2070
	5	51-2008	51-2024	51-2043		
250	2.5		51-2025	51-2044	51-2059	
	5	51-2009	51-2026	51-2045	51-2071	
300	2.5		51-2027	51-2046	51-2060	51-2072
	5	51-2010	51-2028	51-2047	51-2061	
400	5	51-2011	51-2029	51-2048	51-2062	51-2073
500	2.5		51-2030	51-2049	51-2063	51-2074
	5	51-2012	51-2031	51-2050	51-2064	
600	5	51-2013	51-2032	51-2051	51-2065	51-2075
750	5	51-2014	51-2033	51-2052	51-2066	51-2076

		Art.-no.
	**Snap-on mounting XCTB**	**55015**
	**Quick-Fix**	**55021**
	**Sealed shutter, type G**	**59057**

- Measuring accuracy up to 20 kHz: ε ≤ 2 % | ΔΦ ≤ 2° @ 0,05-10 kHz
  ε ≤ 3 % | ΔΦ ≤ 3° @ 10-20 kHz
- Connection cable for harmonic measurements: HELUKABEL Typ: OZ-500 HMH-C with 2x2,5 mm² or 2x4 mm² (0-10 m)
- Harmonic measurements with rated power 0,2 VA - Sr pf 1 (Power factor 1)

Technical data:
Therm. nominal continuous current Icth: 1.2 x Ipr
Therm. nominal short-time current Ith: 60 x Ipr, 1 s
Max. operating voltage Um: 1.2 kV, Urms
Insulation test voltage: 6 kV, Urms., 50 Hz, 1 min
Lightning impulse voltage: 12 kV, 1.2/50 µs
Nominal frequency: 50/60 Hz
Technical standards applied: DIN EN 61869, Part 1 + 2
Harmonic measurements with load 0.2 VA – Sr pf1







XCTB 41.35

Plug-in current transformers

Busbar 1	40 x 10 mm
Busbar 2	30 x 15 mm
Round conductor	31.8 mm
Width	70 mm
Height	91.15 mm
Depth	52 mm

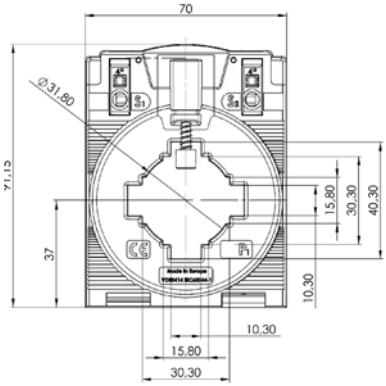

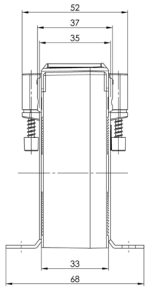

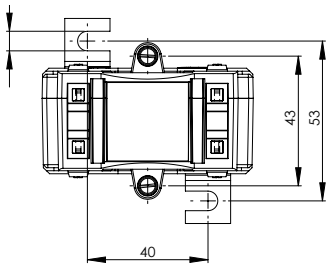

	Secondary current (A) / Accuracy class				
Primary current (A)	Burden (VA)	5A Cl. 1 Art.- no.	5A Cl. 0.5 Art.-no.	5A Cl. 0.5S Art.-no.	5A Cl. 0.2 Art. no.	5A CL. 0.2S Art.-no.
125	2.5	51-0101				
150	2.5	51-0102				
200	1.5		51-0112	51-0126		
	2.5		51-0113			
	5	51-0103				
250	2.5		51-0114	51-0127		
	5	51-0104				
300	2.5		51-0115	51-0128		
	5	51-0105	51-0116			
400	5	51-0106	51-0117	51-0129		
500	2.5		51-0118	51-0130	51-0136	
	5	51-0107	51-0119	51-0131		
600	2.5		51-0120	51-0132	51-0137	51-0141
	5	51-0108	51-0121	51-0133	51-0138	
750	2.5		51-0122	51-0134	51-0139	51-0142
	5	51-0109	51-0123	51-0135	51-0140	51-0143
800	5	51-0110	51-0124			
1000	5	51-0111	51-0125			

		Art.-no.
	**Snap-on mounting XCTB**	**55015**
	**Quick-Fix**	**55021**
	**Sealed shutter, type G**	**59057**

- Measuring accuracy up to 20 kHz: ε ≤ 2 % | ΔΦ ≤ 2° @ 0,05-10 kHz
  ε ≤ 3 % | ΔΦ ≤ 3° @ 10-20 kHz
- Connection cable for harmonic measurements: HELUKABEL Typ: OZ-500 HMH-C with 2x2,5 mm² or 2x4 mm² (0-10 m)
- Harmonic measurements with rated power 0,2 VA - Sr pf 1 (Power factor 1)

Technical data:
Therm. nominal continuous current Icth: 1.2 x Ipr
Therm. nominal short-time current Ith: 60 x Ipr, 1 s
Max. operating voltage Um: 1.2 kV, Urms
Insulation test voltage: 6 kV, Urms., 50 Hz, 1 min
Lightning impulse voltage: 12 kV, 1.2/50 µs
Nominal frequency: 50/60 Hz
Technical standards applied: DIN EN 61869, Part 1 + 2
Harmonic measurements with load 0.2 VA – Sr pf1







XCTB 41.35

Plug-in current transformers

Busbar 1	40 x 10 mm
Busbar 2	30 x 15 mm
Round conductor	31.8 mm
Width	70 mm
Height	91.15 mm
Depth	52 mm

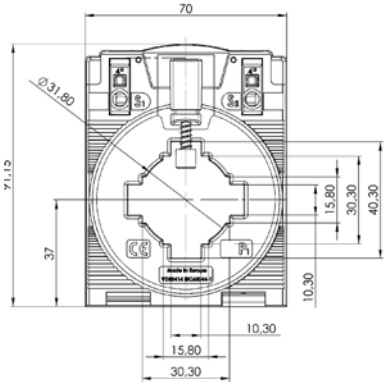

Primary current (A)	Burden (VA)	Secondary current (A) / Accuracy class			
		1A Cl. 1 Art.- no.	1A Cl. 0.5 Art.-no.	1A Cl. 0.5S Art.-no.	1A Cl. 0.2 Art. no.
75	1	51-2101			
80	1	51-2102			
100	1.25	51-2103			
125	2.5	51-2104			
150	2.5	51-2105			
200	1.5		51-2115	51-2129	
	2.5		51-2116		
	5	51-2106			
250	2.5		51-2117	51-2130	
	5	51-2107			
300	2.5		51-2118	51-2131	
	5	51-2108	51-2119		
400	5	51-2109	51-2120	51-2132	
500	2.5		51-2121	51-2133	51-2139
	5	51-2110	51-2122	51-2134	
600	2.5		51-2123	51-2135	51-2140
	5	51-2111	51-2124	51-2136	51-2141
750	2.5		51-2125	51-2137	51-2142
	5	51-2112	51-2126	51-2138	
800	5	51-2113	51-2127		
1000	5	51-2114	51-2128		

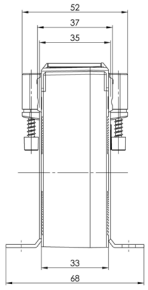

		Art.-no.
	**Snap-on mounting XCTB**	**55015**
	**Quick-Fix**	**55021**
	**Sealed shutter, type G**	**59057**

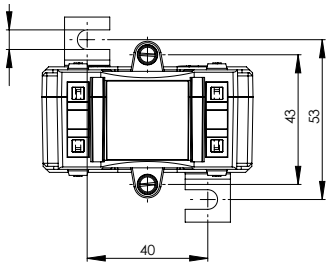

- Measuring accuracy up to 20 kHz: ε ≤ 2 % | ΔΦ ≤ 2° @ 0,05-10 kHz
  ε ≤ 3 % | ΔΦ ≤ 3° @ 10-20 kHz
- Connection cable for harmonic measurements: HELUKABEL Typ: OZ-500 HMH-C with 2x2,5 mm² or 2x4 mm² (0-10 m)
- Harmonic measurements with rated power 0,2 VA - Sr pf 1 (Power factor 1)

Technical data:
Therm. nominal continuous current Icth: 1.2 x Ipr
Therm. nominal short-time current Ith: 60 x Ipr, 1 s
Max. operating voltage Um: 1.2 kV, Urms
Insulation test voltage: 6 kV, Urms., 50 Hz, 1 min
Lightning impulse voltage: 12 kV, 1.2/50 µs
Nominal frequency: 50/60 Hz
Technical standards applied: DIN EN 61869, Part 1 + 2
Harmonic measurements with load 0.2 VA – Sr pf1







XCTB 51.35

Plug-in current transformers

Busbar 1	50 x 12 mm
Busbar 2	40 x 30 mm
Round conductor	43,7 mm
Width	85 mm
Height	105,25 mm
Depth	52 mm

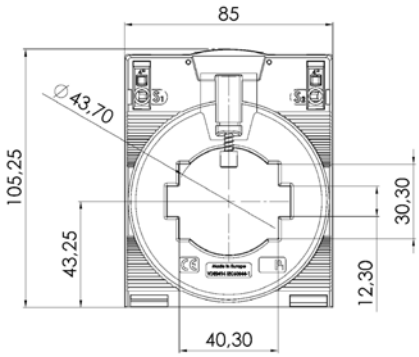

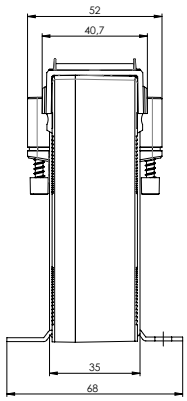

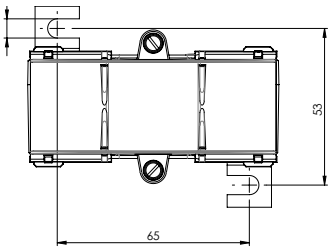

	Secondary current (A) / Accuracy class				
Primary current (A)	Burden (VA)	5A Cl. 1 Art.- no.	5A Cl. 0.5 Art.-no.	5A Cl. 0.5S Art.-no.	5A Cl. 0.2 Art. no.	5A CL. 0.2S Art.-no.
100	1.25	51-0201				
	1.5		51-0215	51-0236		
125	1.5		51-0216	51-0237		
	2.5	51-0202				
150	2.5	51-0203	51-0217	51-0238		
200	1.5		51-0218	51-0239	51-0254	
	2.5		51-0219	51-0240		
	5	51-0204				
250	1.5		51-0220	51-0241	51-0255	51-0268
	2.5		51-0221	51-0242	51-0256	
	5	51-0205				
300	2.5		51-0222	51-0243	51-0257	51-0269
	5	51-0206	51-0223	51-0244	51-0258	
400	2.5		51-0224	51-0245	51-0259	51-0270
	5	51-0207	51-0225	51-0246	51-0260	
500	2.5		51-0226	51-0247	51-0261	51-0271
	5	51-0208	51-0227	51-0248	51-0262	51-0272
600	2.5		51-0228	51-0249	51-0263	51-0273
	5	51-0209	51-0229	51-0250	51-0264	51-0274
750	2.5		51-0230	51-0251	51-0265	51-0275
	5	51-0210	51-0231	51-0252	51-0266	51-0276
800	5	51-0211	51-0232			
1000	5	51-0212	51-0233	51-0253	51-0267	51-0277
1200	5	51-0213	51-0234			
1250	5	51-0214	51-0235			

		Art.-no.
	**Quick-Fix**	**55021**
	**Sealed shutter, type H**	**59058**

- Measuring accuracy up to 20 kHz: ε ≤ 2 % | ΔΦ ≤ 2° @ 0,05-10 kHz
  ε ≤ 3 % | ΔΦ ≤ 3° @ 10-20 kHz
- Connection cable for harmonic measurements: HELUKABEL Typ: OZ-500 HMH-C with 2x2,5 mm² or 2x4 mm² (0-10 m)
- Harmonic measurements with rated power 0,2 VA - Sr pf 1 (Power factor 1)

Technical data:

Therm. nominal continuous current Icth: 1.2 x Ipr
Therm. nominal short-time current Ith: 60 x Ipr, 1 s
Max. operating voltage Um: 1.2 kV, Urms
Insulation test voltage: 6 kV, Urms., 50 Hz, 1 min
Lightning impulse voltage: 12 kV, 1.2/50 µs
Nominal frequency: 50/60 Hz
Technical standards applied: DIN EN 61869, Part 1 + 2
Harmonic measurements with load 0.2 VA – Sr pf1







XCTB 51.35

Plug-in current transformers

Busbar 1	50 x 12 mm
Busbar 2	40 x 30 mm
Round conductor	43.7 mm
Width	85 mm
Height	105.25 mm
Depth	52 mm

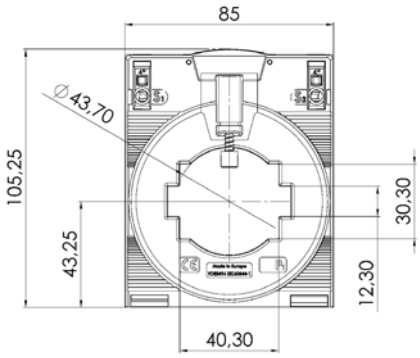

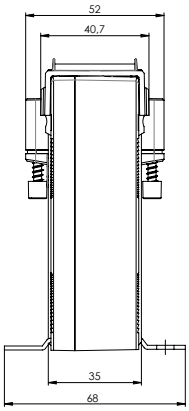

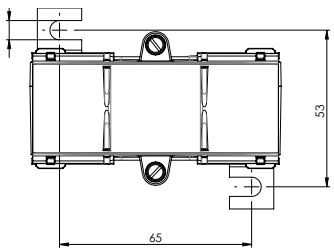

	Secondary current (A) / Accuracy class				
Primary current (A)	Burden (VA)	1A Cl. 1 Art.- no.	1A Cl. 0.5 Art.-no.	1A Cl. 0.5S Art.-no.	1A Cl. 0.2 Art. no.	1A CL. 0.2S Art.-no.
100	1.25	51-2201				
	1.5		51-2215	51-2237		
125	1.5		51-2216	51-2238		
	2.5	51-2202				
150	2.5	51-2203	51-2217	51-2239		
200	1.5		51-2218	51-2240	51-2256	
	2.5		51-2219	51-2241	51-2257	
	5	51-2204				
250	1.5		51-2220	51-2242	51-2258	51-2270
	2.5		51-2221	51-2243	51-2259	
	5	51-2205	51-2222	51-2244		
300	2.5		51-2223	51-2245	51-2260	51-2271
	5	51-2206	51-2224	51-2246	51-2261	
400	2.5		51-2225	51-2247	51-2262	51-2272
	5	51-2207	51-2226	51-2248		
500	2.5		51-2227	51-2249	51-2263	51-2273
	5	51-2208	51-2228	51-2250	51-2264	51-2274
600	2.5		51-2229	51-2251	51-2265	51-2275
	5	51-2209	51-2230	51-2252	51-2266	
750	2.5		51-2231	51-2253	51-2267	51-2276
	5	51-2210	51-2232	51-2254	51-2268	
800	5	51-2211	51-2233			
1000	5	51-2212	51-2234	51-2255	51-2269	51-2277
1200	5	51-2213	51-2235			
1250	5	51-2214	51-2236			

		Art.-no.
	**Quick-Fix**	**55021**
	**Sealed shutter, type H**	**59058**

- Measuring accuracy up to 20 kHz: ε ≤ 2 % | ΔΦ ≤ 2° @ 0,05-10 kHz
  ε ≤ 3 % | ΔΦ ≤ 3° @ 10-20 kHz
- Connection cable for harmonic measurements: HELUKABEL Typ: OZ-500 HMH-C with 2x2,5 mm² or 2x4 mm² (0-10 m)
- Harmonic measurements with rated power 0,2 VA - Sr pf 1 (Power factor 1)

Technical data:
Therm. nominal continuous current Icth: 1.2 x Ipr
Therm. nominal short-time current Ith: 60 x Ipr, 1 s
Max. operating voltage Um: 1.2 kV, Urms
Insulation test voltage: 6 kV, Urms., 50 Hz, 1 min
Lightning impulse voltage: 12 kV, 1.2/50 µs
Nominal frequency: 50/60 Hz
Technical standards applied: DIN EN 61869, Part 1 + 2
Harmonic measurements with load 0.2 VA – Sr pf1





XCTB 61.35

Plug-in current transformers



Busbar 1	63 x 10 mm
Busbar 2	50 x 30 mm
Round conductor	43,7 mm
Width	95 mm
Height	114,86 mm
Depth	52 mm

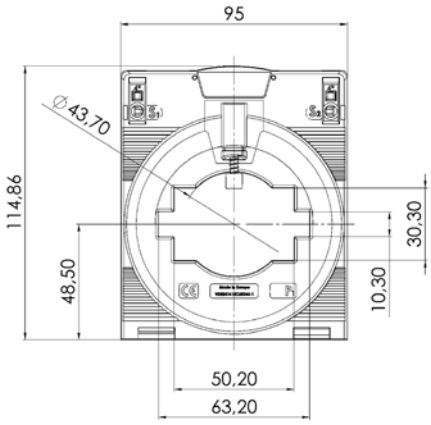

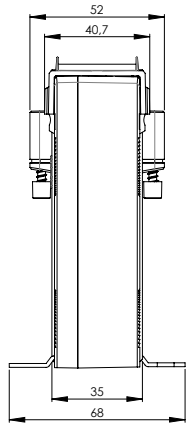

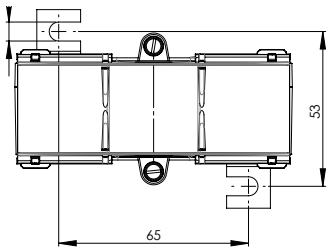

	Secondary current (A) / Accuracy class				
Primary current (A)	Burden (VA)	5A Cl. 1 Art.- no.	5A Cl. 0.5 Art.-no.	5A Cl. 0.5S Art.-no.	5A Cl. 0.2 Art. no.	5A CL. 0.2S Art.-no.
200	1.5		51-0314	51-0334	51-0353	
	2.5	51-0301	51-0315	51-0335	51-0354	
250	1.5		51-0316	51-0336	51-0355	
	2.5		51-0317	51-0337	51-0356	
	5	51-0302	51-0318	51-0338		
300	2.5		51-0319	51-0339	51-0357	51-0368
	5	51-0303	51-0320	51-0340	51-0358	
400	2.5		51-0321	51-0341	51-0359	51-0369
	5	51-0304	51-0322	51-0342	51-0360	
500	2.5		51-0323	51-0343	51-0361	51-0370
	5	51-0305	51-0324	51-0344	51-0362	51-0371
600	2.5		51-0325	51-0345	51-0363	51-0372
	5	51-0306	51-0326	51-0346	51-0364	51-0373
750	5	51-0307	51-0327	51-0347	51-0365	51-0374
800	5	51-0308	51-0328	51-0348	51-0366	
1000	5	51-0309	51-0329	51-0349	51-0367	
1200	5	51-0310	51-0330	51-0350		
1250	5	51-0311	51-0331	51-0351		
1500	5	51-0312	51-0232	51-0352		
1600	5	51-0313	51-0333			

		Art.-no.
	**Quick-Fix**	**55021**
	**Sealed shutter, type J**	**59059**

- Measuring accuracy up to 20 kHz: ε ≤ 2 % | ΔΦ ≤ 2° @ 0,05-10 kHz
  ε ≤ 3 % | ΔΦ ≤ 3° @ 10-20 kHz
- Connection cable for harmonic measurements: HELUKABEL Typ: OZ-500 HMH-C with 2x2,5 mm² or 2x4 mm² (0-10 m)
- Harmonic measurements with rated power 0,2 VA - Sr pf 1 (Power factor 1)

Technical data:
Therm. nominal continuous current Icth: 1.2 x Ipr
Therm. nominal short-time current Ith: 60 x Ipr, 1 s
Max. operating voltage Um: 1.2 kV, Urms
Insulation test voltage: 6 kV, Urms., 50 Hz, 1 min
Lightning impulse voltage: 12 kV, 1.2/50 µs
Nominal frequency: 50/60 Hz
Technical standards applied: DIN EN 61869, Part 1 + 2
Harmonic measurements with load 0.2 VA – Sr pf1







XCTB 61.35

Plug-in current transformers

Busbar 1	50 x 12 mm
Busbar 2	40 x 30 mm
Round conductor	43.7 mm
Width	85 mm
Height	105.25 mm
Depth	52 mm

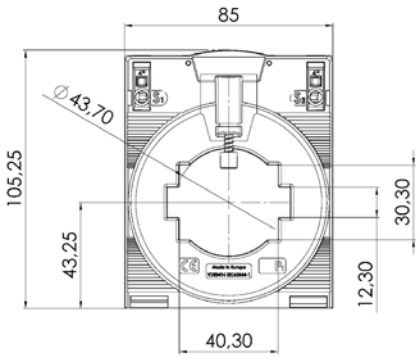

Primary current (A)	Burden (VA)	Secondary current (A) / Accuracy class				
		1A Cl. 1 Art.- no.	1A Cl. 0.5 Art.-no.	1A Cl. 0.5S Art.-no.	1A Cl. 0.2 Art. no.	1A CL. 0.2S Art.-no.
200	1.5		51-2314	51-2334	51-2353	
	2.5	51-2301	51-2315	51-2335	51-2354	
250	1.5		51-2316	51-2336	51-2355	51-2371
	2.5		51-2317	51-2337	51-2356	
	5	51-2302	51-2318	51-2338		
300	2.5		51-2319	51-2339	51-2357	51-2372
	5	51-2303	51-2320	51-2340	51-2358	
400	2.5		51-2321	51-2341	51-2359	51-2373
	5	51-2304	51-2322	51-2342	51-2360	
500	2.5		51-2323	51-2343	51-2361	51-2374
	5	51-2305	51-2324	51-2344	51-2362	51-2375
600	2.5		51-2325	51-2345	51-2363	51-2376
	5	51-2306	51-2326	51-2346	51-2364	51-2377
750	5	51-2307	51-2327	51-2347	51-2365	51-2378
800	5	51-2308	51-2328	51-2348	51-2366	
1000	5	51-2309	51-2329	51-2349	51-2367	
1200	5	51-2310	51-2330	51-2350	51-2368	
1250	5	51-2311	51-2331	51-2351	51-2369	
1500	5	51-2312	51-2232	51-2352	51-2370	
1600	5	51-2313	51-2333			

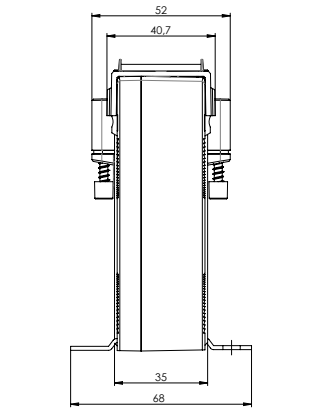

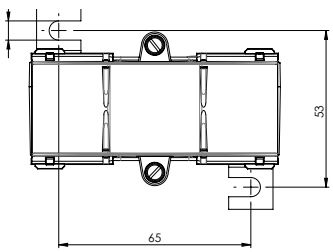

		Art.-no.
	**Quick-Fix**	**55021**
	**Sealed shutter, type J**	**59059**

- Measuring accuracy up to 20 kHz: ε ≤ 2 % | ΔΦ ≤ 2° @ 0,05-10 kHz
  ε ≤ 3 % | ΔΦ ≤ 3° @ 10-20 kHz
- Connection cable for harmonic measurements: HELUKABEL Typ: OZ-500 HMH-C with 2x2,5 mm² or 2x4 mm² (0-10 m)
- Harmonic measurements with rated power 0,2 VA - Sr pf 1 (Power factor 1)

Technical data:
Therm. nominal continuous current Icth: 1.2 x Ipr
Therm. nominal short-time current Ith: 60 x Ipr, 1 s
Max. operating voltage Um: 1.2 kV, Urms
Insulation test voltage: 6 kV, Urms., 50 Hz, 1 min
Lightning impulse voltage: 12 kV, 1.2/50 µs
Nominal frequency: 50/60 Hz
Technical standards applied: DIN EN 61869, Part 1 + 2
Harmonic measurements with load 0.2 VA – Sr pf1







XCTB 81.35

Plug-in current transformers

Busbar 1	80 x 10 mm
Busbar 2	60 x 30 mm
Round conductor	54.7 mm
Width	120 mm
Height	134.66 mm
Depth	52 mm

		Secondary current (A) / Accuracy class				
Primary current (A)	Burden (VA)	5A Cl. 1 Art.- no.	5A Cl. 0.5 Art.-no.	5A Cl. 0.5S Art.-no.	5A Cl. 0.2 Art. no.	5A CL. 0.2S Art.-no.
400	2.5		51-0411	51-0426	51-0440	
	5	51-0401				
500	2.5		51-0412	51-0427	51-0441	51-0454
	5	51-0402	51-0413			
600	2.5		51-0414	51-0428	51-0442	51-0455
	5	51-0403	51-0415	51-0429	51-0443	51-0456
750	2.5		51-0416	51-0430	51-0444	51-0457
	5	51-0404	51-0417	51-0431	51-0445	51-0458
800	2.5		51-0418	51-0432	51-0446	51-0459
	5	51-0405	51-0419	51-0433	51-0447	51-0460
1000	5	51-0406	51-0420	51-0434	51-0448	51-0461
1200	5	51-0407	51-0421	51-0435	51-0449	51-0462
1250	5	51-0408	51-0422	51-0436	51-0450	51-0463
1500	5	51-0409	51-0423	51-0437	51-0451	51-0464
1600	5	51-0410	51-0424	51-0438	51-0452	51-0465
2000	5		51-0425	51-0439	51-0453	51-0466

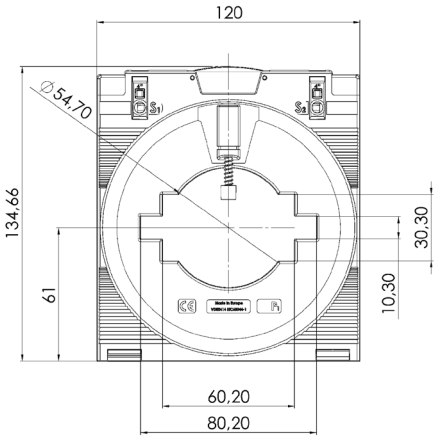

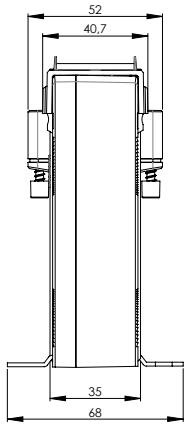

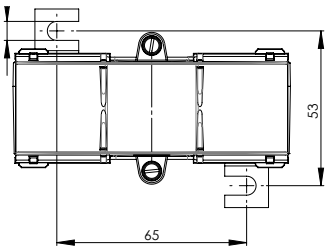

		Art.-no.
	**Quick-Fix**	**55021**
	**Sealed shutter, type J**	**59059**

- Measuring accuracy up to 20 kHz: ε ≤ 2 % | ΔΦ ≤ 2° @ 0,05-10 kHz
  ε ≤ 3 % | ΔΦ ≤ 3° @ 10-20 kHz
- Connection cable for harmonic measurements: HELUKABEL Typ: OZ-500 HMH-C with 2x2,5 mm² or 2x4 mm² (0-10 m)
- Harmonic measurements with rated power 0,2 VA - Sr pf 1 (Power factor 1)

Technical data:
Therm. nominal continuous current Icth: 1.2 x Ipr
Therm. nominal short-time current Ith: 60 x Ipr, 1 s
Max. operating voltage Um: 1.2 kV, Urms
Insulation test voltage: 6 kV, Urms., 50 Hz, 1 min
Lightning impulse voltage: 12 kV, 1.2/50 µs
Nominal frequency: 50/60 Hz
Technical standards applied: DIN EN 61869, Part 1 + 2
Harmonic measurements with load 0.2 VA – Sr pf1







XCTB 81.35

Plug-in current transformers

		Secondary current (A) / Accuracy class				
Primary current (A)	Burden (VA)	1A Cl. 1 Art.- no.	1A Cl. 0.5 Art.-no.	1A Cl. 0.5S Art.-no.	1A Cl. 0.2 Art. no.	1A CL. 0.2S Art.-no.
400	2.5		51-2411	51-2426	51-2441	
	5	51-2401				
500	2.5		51-2412	51-2427	51-2442	51-2455
	5	51-2402	51-2413	51-2428		
600	2.5		51-2414	51-2429	51-2443	51-2456
	5	51-2403	51-2415	51-2430	51-2444	51-2457
750	2.5		51-2416	51-2431	51-2445	51-2458
	5	51-2404	51-2417	51-2432	51-2446	51-2459
800	2.5		51-2418	51-2433	51-2447	51-2460
	5	51-2405	51-2419	51-2434	51-2448	51-2461
1000	5	51-2406	51-2420	51-2435	51-2449	51-2462
1200	5	51-2407	51-2421	51-2436	51-2450	51-2463
1250	5	51-2408	51-2422	51-2437	51-2451	51-2464
1500	5	51-2409	51-2423	51-2438	51-2452	51-2465
1600	5	51-2410	51-2424	51-2439	51-2453	51-2466
2000	5		51-2425	51-2440	51-2454	51-2467

Busbar 1	80 x 10 mm	
Busbar 2	60 x 30 mm	
Round conductor	54.7 mm	
Width	120 mm	
Height	134.66 mm	
Depth	52 mm	

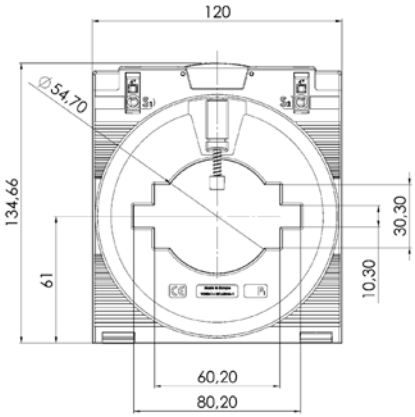

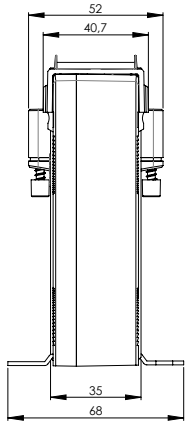

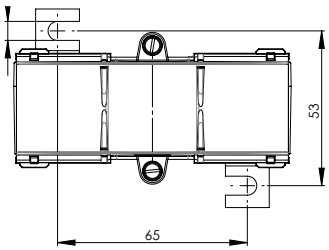

		Art.-no.
	**Quick-Fix**	**55021**
	**Sealed shutter, type J**	**59059**

- Measuring accuracy up to 20 kHz: ε ≤ 2 % | ΔΦ ≤ 2° @ 0,05-10 kHz
  ε ≤ 3 % | ΔΦ ≤ 3° @ 10-20 kHz
- Connection cable for harmonic measurements: HELUKABEL Typ: OZ-500 HMH-C with 2x2,5 mm² or 2x4 mm² (0-10 m)
- Harmonic measurements with rated power 0,2 VA - Sr pf 1 (Power factor 1)

Technical data:
Therm. nominal continuous current Icth: 1.2 x Ipr
Therm. nominal short-time current Ith: 60 x Ipr, 1 s
Max. operating voltage Um: 1.2 kV, Urms
Insulation test voltage: 6 kV, Urms., 50 Hz, 1 min
Lightning impulse voltage: 12 kV, 1.2/50 µs
Nominal frequency: 50/60 Hz
Technical standards applied: DIN EN 61869, Part 1 + 2
Harmonic measurements with load 0.2 VA – Sr pf1







XCTB 101.35

Plug-in current transformers

Busbar 1	100 x 10 mm
Busbar 2	80 x 30 mm
Round conductor	70 mm
Width	130 mm
Height	147.49 mm
Depth	52 mm

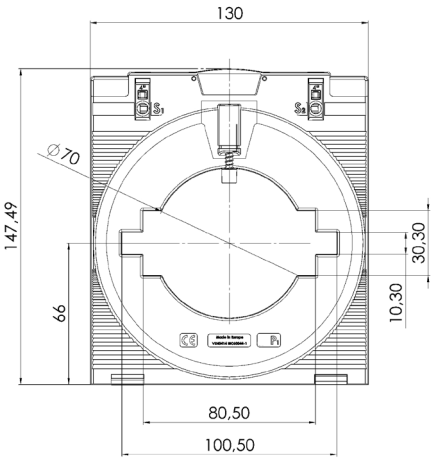

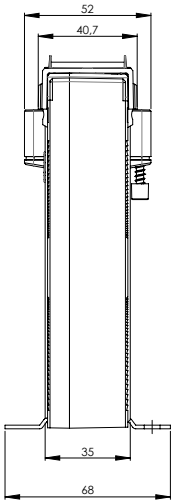

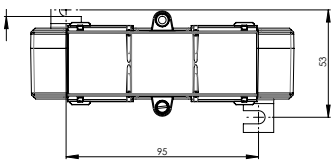

	Secondary current (A) / Accuracy class					
Primary current (A)	Burden (VA)	5A Cl. 1 Art.- no.	5A Cl. 0.5 Art.-no.	5A Cl. 0.5S Art.-no.	5A Cl. 0.2 Art. no.	5A CL. 0.2S Art.-no.
400	2.5		51-0508			
	5	51-0501				
500	2.5		51-0509			
	5	51-0502	51-0510			
600	2.5		51-0511	51-0523		
	5		51-0512			
750	2.5		51-0513	51-0524		
	5	51-0503	51-0514	51-0525		
800	2.5		51-0515	51-0526		
	5	51-0504	51-0516	51-0527		
1000	5	51-0505	51-0517	51-0528		
1200	5	51-0506	51-0518	51-0529	51-0534	
1250	5	51-0507	51-0519	51-0530	51-0535	51-0540
1500	5		51-0520	51-0531	51-0536	51-0541
1600	5		51-0521	51-0532	51-0537	51-0542
2000	5		51-0522	51-0533	51-0538	51-0543

		Art.-no.
	**Quick-Fix**	**55021**
	**Sealed shutter, type J**	**59059**

- Measuring accuracy up to 20 kHz: ε ≤ 2 % | ΔΦ ≤ 2° @ 0,05-10 kHz
  ε ≤ 3 % | ΔΦ ≤ 3° @ 10-20 kHz
- Connection cable for harmonic measurements: HELUKABEL Typ: OZ-500 HMH-C with 2x2,5 mm² or 2x4 mm² (0-10 m)
- Harmonic measurements with rated power 0,2 VA - Sr pf 1 (Power factor 1)

Technical data:
Therm. nominal continuous current Icth: 1.2 x Ipr
Therm. nominal short-time current Ith: 60 x Ipr, 1 s
Max. operating voltage Um: 1.2 kV, Urms
Insulation test voltage: 6 kV, Urms., 50 Hz, 1 min
Lightning impulse voltage: 12 kV, 1.2/50 µs
Nominal frequency: 50/60 Hz
Technical standards applied: DIN EN 61869, Part 1 + 2
Harmonic measurements with load 0.2 VA – Sr pf1







XCTB 101.35

Plug-in current transformers

Busbar 1	100 x 10 mm
Busbar 2	80 x 30 mm
Round conductor	70 mm
Width	130 mm
Height	147.49 mm
Depth	52 mm

		Secondary current (A) / Accuracy class				
Primary current (A)	Burden (VA)	1A Cl. 1 Art.- no.	1A Cl. 0.5 Art.-no.	1A Cl. 0.5S Art.-no.	1A Cl. 0.2 Art. no.	1A CL. 0.2S Art.-no.
400	2.5		51-2508			
	5	51-2501				
500	2.5		51-2509	51-2523		
	5	51-2502	51-2510			
600	2.5		51-2511	51-2524		
	5		51-2512	51-2525		
750	2.5		51-2513	51-2526		
	5	51-2503	51-2514	51-2527		
800	2.5		51-2515	51-2528	51-2536	
	5	51-2504	51-2516	51-2529		
1000	5	51-2505	51-2517	51-2530	51-2537	51-2543
1200	5	51-2506	51-2518	51-2531	51-2538	51-2544
1250	5	51-2507	51-2519	51-2532	51-2539	51-2545
1500	5		51-2520	51-2533	51-2540	51-2546
1600	5		51-2521	51-2534	51-2541	51-2547
2000	5		51-2522	51-2535	51-2542	51-2548

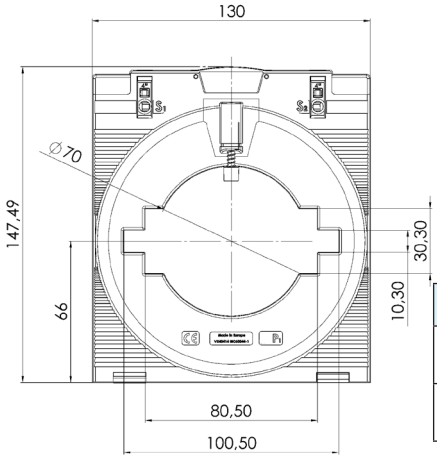

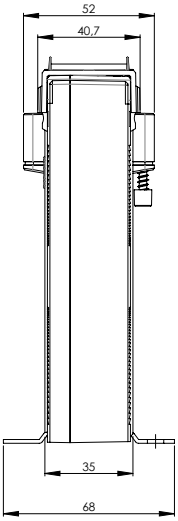

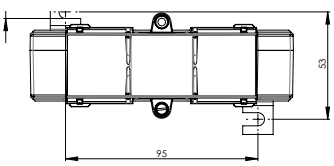

		Art.-no.
	**Quick-Fix**	**55021**
	**Sealed shutter, type J**	**59059**

- Measuring accuracy up to 20 kHz: ε ≤ 2 % | ΔΦ ≤ 2° @ 0,05-10 kHz
  ε ≤ 3 % | ΔΦ ≤ 3° @ 10-20 kHz
- Connection cable for harmonic measurements: HELUKABEL Typ: OZ-500 HMH-C with 2x2,5 mm² or 2x4 mm² (0-10 m)
- Harmonic measurements with rated power 0,2 VA - Sr pf 1 (Power factor 1)

Technical data:
Therm. nominal continuous current Icth: 1.2 x Ipr
Therm. nominal short-time current Ith: 60 x Ipr, 1 s
Max. operating voltage Um: 1.2 kV, Urms
Insulation test voltage: 6 kV, Urms., 50 Hz, 1 min
Lightning impulse voltage: 12 kV, 1.2/50 µs
Nominal frequency: 50/60 Hz
Technical standards applied: DIN EN 61869, Part 1 + 2
Harmonic measurements with load 0.2 VA – Sr pf1





Split-core current transformer, type XKBU



Features / benefits

- Perfect for subsequent assembly into already existing installations
- Easy and safe mounting, due to hearable locking system
- Available in nominal current ranges 250…2500 A
- Deliverable with secondary current 5 A / 1 A
- Accuracy classes @ 50 Hz: 1 and 0.5
- Four different construction types
- Connecting cable for harmonic measurements: HELUKABEL type: OZ-500 HMH-C with 2x2.5 or 2x4 mm^2 (0-10m)
- Harmonic measurements with load 0.2 VA – Sr pf1 (power factor 1)
- Suitable for networks subject to harmonics with fundamental frequency of 50 Hz

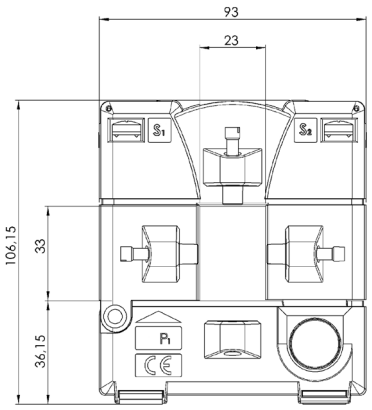

General technical specifications

- Operating temperature: -5°C < T < +40°C
- Storage temperature: -25°C < T < +70°C
- Therm. nominal continuous rated current I_{cth}: 1.0 x I_{pr}
- Therm. nominal short-time current I_{th}: 60 x I_{pr}, 1 sec.
- Max. operating voltage U_m: 0.72 kV
- Insulation test voltage: 3 kV, U_{eff}, 50 Hz, 1 min.
- Rated frequency: 50 Hz
- Isolation class: E
- Applicable technical standard: DIN EN 61869, part 1 + 2

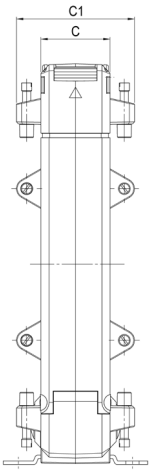

Accuracy classes for harmonic measurements

- Measuring accuracy up to 20 kHz: $\Delta\phi \leq 1°$ @ 0.05-20 kHz
  $\varepsilon \leq 2\%$ @ 0.05-10 kHz
  $\varepsilon \leq 3\%$ @ 10-20 kHz

Dimensions

Type	A (width) (mm)	B (height) (mm)	C / C1 (depth) (mm)	D (mm)	E (mm)	F (mm)	G (mm)
XKBU 23	93	106	34/58	23	33	64	56
XKBU 58	125	158	34/58	55	85	96	56
XKBU 812	155	198	34/58	85	125	126	56
XKBU 816	195	243	64/79	85	165	156	62

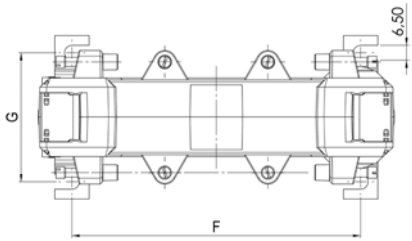

Order list XKBU 23

Secondary current		5 A		1 A	
Primary current (A)	Burden (VA)	Accuracy class		Accuracy class	
		1	0.5	1	0.5
		Art.-no.	Art.-no.	Art.-no.	Art.-no.
250	1.5	11-6004		11-1004	
300	3.75	11-6005		11-1005	
400	1		11-6007		11-1007
	5	11-6006		11-1006	

Order list XKBU 58

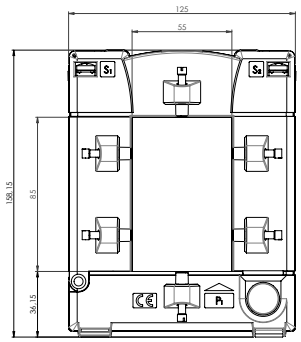

Secondary current		5 A		1 A	
Primary current (A)	Burden (VA)	Accuracy class		Accuracy class	
		1	0.5	1	0.5
		Art.-no.	Art.-no.	Art.-no.	Art.-no.
250	1.5	11-6101		11-1101	
300	2.5	11-6102		11-1101	
400	1		11-6107		11-1107
	2.5	11-6103		11-1103	
500	2.5		11-6108		11-1108
	5	11-6104		11-1104	
600	2.5		11-6109		11-1109
	5	11-6105		11-1105	
750	2.5		11-6110		11-1110
	5	11-6106		11-1106	
800	2.5		11-6111		11-1111
1000	5		11-6112		11-1112

Order list XKBU 812

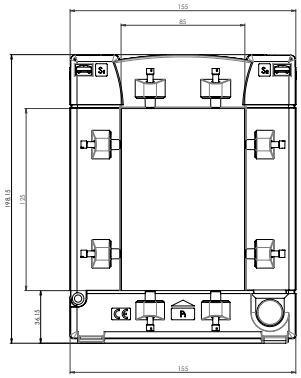

Secondary current		5 A		1 A	
Primary current (A)	Burden (VA)	Accuracy class		Accuracy class	
		1	0.5	1	0.5
		Art.-no.	Art.-no.	Art.-no.	Art.-no.
250	1.5	11-6201		11-1201	
300	2.5	11-6202		11-122	
400	2.5	11-6203		11-1203	
500	2.5		11-6207		11-1207
	5	11-6204		11-1204	
600	2.5		11-6208		11-1208
	5	11-6205		11-1205	
750	2.5		11-6209		11-1209
	5	11-6206		11-1206	
800	2.5		11-6210		11-1210
1000	5		11-6211		
1200	5		11-6212		
1250	5		11-6213		
1500	5		11-6214		

Order list XKBU 816

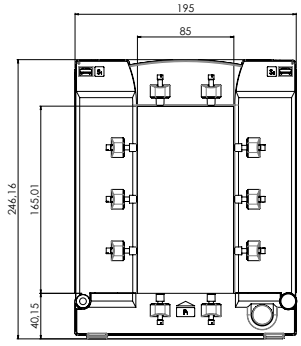

Secondary current		5 A	
Primary current (A)	Burden (VA)	Accuracy class	
		1	0.5
		Art.-no.	Art.-no.
1000	5	11-6301	11-6307
1200	5	11-6302	11-6308
1500	5	11-6303	11-6309
1600	5	11-6304	11-6310
2000	5	11-6305	11-6311
2500	5	11-6306	11-6312

Split-core current transformer, type XKBR



Features / benefits

- Perfect for subsequent assembly into already existing installations
- Easy and safe mounting
- Due to the „click"-system even a one-hand mounting is possible
- Available in nominal current ranges 100…1000 A
- Deliverable with secondary current 5 A / 1 A
- In total 8 different construction types of series XKBR
- UL-certification in preparation and sealable (XKBR 18S; XKBR 18L; XKBR 28; XKBR 42; XKBR42L)
- Harmonic measurements with load 0.2 VA – Sr pf1 (power factor 1)
- Suitable for networks subject to harmonics with fundamental frequency of 50 Hz

General technical specifications

- Length of connection cable: Sec. 1A: 2.5 m, cross section 2x0.75 mm² (XKBR 18; XKBR 32; XKBR 44) (color coded) 2.5 m, cross section 2x0.5 mm² (XKBR 18S; XKBR 18L; XKBR 28; XKBR 42; XKBR 42L)
  Sec. 5A: 0.5 m, cross section 2x1.5 mm² (XKBR 18L; XKBR 28; XKBR 32; XKBR 44; XKBR 42; XKBR 42L)

Connection cables suitable for harmonic measurements in the mentioned accuracy classes

- Operating temperature: -5°C < T < +50°C
- Storage temperature: -25°C < T < +70°C
- Therm. nominal continuous rated current I_{cth}: 1.2 x I_{pr}
- Therm. nominal short-time current I_{th}: 60 x I_{pr}, 1 sec.
- Max. operating voltage U_m: 0.72 kV
- Insulation test voltage: 3 kV, U_{eff}, 50 Hz, 1 min.
- Rated frequency: 50 Hz
- Insulation class: E
- Applicable technical standard: DIN EN 61869, part 1 + 2

Accuracy classes

- XKBR 18S / XKBR 18 / XKBR 18L / XKBR 28
  Measuring accuracy up to 20 kHz: $\Delta\phi \leq 1°$ @ 0.05-20 kHz
  ε ≤ 2% @ 0.05-1.5 kHz
  ε ≤ 5% @ 1.5-9 kHz
  ε ≤ 10% @ 9-20 kHz

- XKBR 32 / XKBR 42 / XKBR 44 / XKBR 42L
  Measuring accuracy up to 20 kHz: $\Delta\phi \leq 1°$ @ 0.05-20 kHz
  ε ≤ 2% @ 0.05-1.5 kHz
  ε ≤ 5% @ 1.5-3 kHz
  ε ≤ 10% @ 3-9 kHz
  ε ≤ 20% @ 9-20 kHz

Dimension drawings:

XKBR 18S

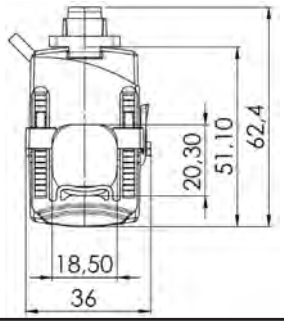

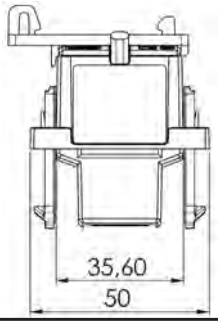

XKBR 18

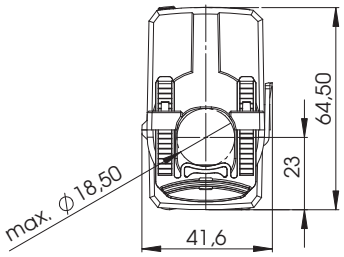

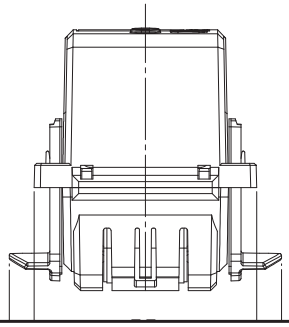

XKBR 18L

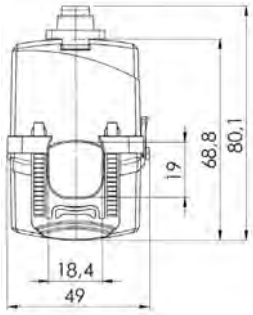

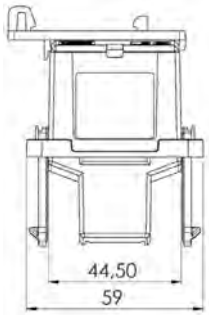

XKBR 28

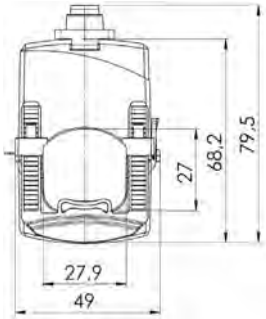

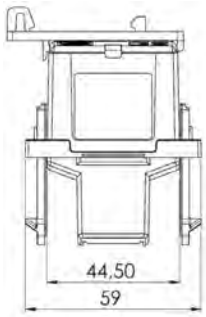

XKBR 32

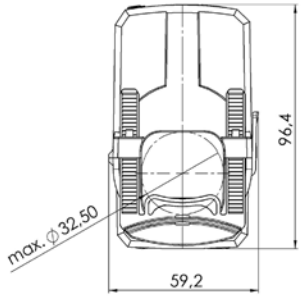

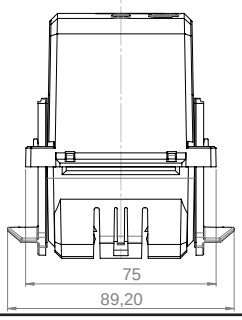

XKBR 44

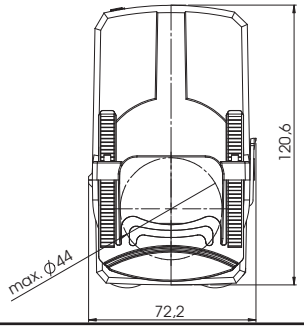

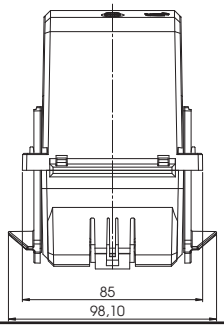

XKBR 42

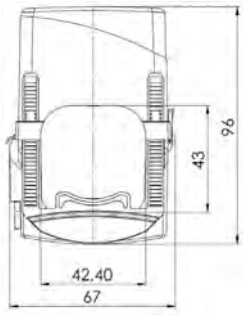

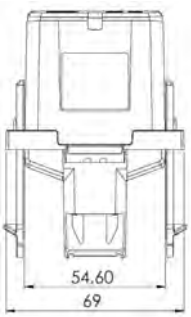

XKBR 42L

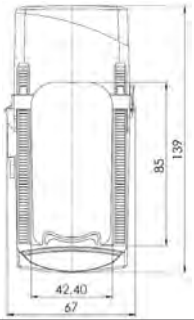

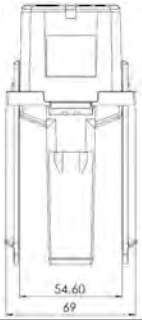

Order list XKBR 18S

Secondary current		1 A
Primary current (A)	Burden (A)	Accuracy class
		1FS5
		Art.-no.
200	0.4	18S-3006
250	0.5	18S-3008

Snap-on mounting for mounting on DIN rail: Art.-no.: 55016

Order list XKBR 18

Secondary current		1 A
Primary current (A)	Burden (VA)	Accuracy class
		1FS5
		Art.-no.
200	1	18-3027

Order list XKBR 18L

Secondary current		5 A		1 A	
Primary current (A)	Burden (VA)	Accuracy class		Accuracy class	
		1FS5	0.5FS5	1FS10	0.5FS10
		Art.-no.	Art.-no.	Art.-no.	Art.-no.
100	0.3			18L-3001	
125	0.5			18L-3002	
150	1	18L-6001		18L-3003	
200	0.2				18L-3004
	1.5	18L-6002		18L-3005	
250	0.5				18L-3006
	1		18L-6003		
	2	18L-6004			
	2.5			18L-3007*	

*FS5

Snap-on mounting for mounting on DIN rail: Art.-no.: 55017

Order list XKBR 28

Secondary current		5 A		1 A	
Primary current (A)	Burden (VA)	Accuracy class		Accuracy class	
		1FS5	0.5FS5	1FS5	0.5FS10
		Art.-no.	Art.-no.	Art.-no.	Art.-no.
200	0.3			28-3001*	
250	1	28-6001		28-3002	
300	1.5	28-6002		28-3003	
400	0.5				28-3004
	2.5	28-6003		28-3005	
500	1		28-6004		28-3006
	3	28-6005		28-3007	

*FS10

Snap-on mounting for mounting on DIN rail: Art.-no.: 55017

Order list XKBR 32

Secondary current		5 A	1 A
Primary current (A)	Burden (VA)	Accuracy class	Accuracy class
		1FS5	1FS5
		Art.-no.	Art.-no.
300	2.5	32-6035	
	5		32-3035
400	5	32-6037	32-3037
500	5	32-6039	32-3039
600	5	32-6041	32-3041

Order list XKBR 42

Secondary current		5 A		1 A	
Primary current (A)	Burden (VA)	Accuracy class		Accuracy class	
		1FS5	0.5FS5	1FS5	0.5FS5
		Art.-no.	Art.-no.	Art.-no.	Art.-no.
250	2.5			42-3001	
300	2.5	42-6001		42-3002	
400	2.5				42-3003
	5	42-6002		42-3004	
500	2.5				42-3005
	5	42-6003		42-3006	
600	2.5		42-6004		42-3007*
	5	42-6005		42-3008	
750	2.5		42-6006*		42-3009*
	5	42-6007		42-3010	
800	2.5		42-6008*		42-3011*
	5	42-6009		42-3012	
1000	2.5		42-6010*		42-3013*
	5	42-6011		42-3014*	

*FS10

Order list XKBR 42L

Secondary current		5 A		1 A	
Primary current (A)	Burden (VA)	Accuracy class		Accuracy class	
		1FS5	0.5FS5	1FS5	0.5FS5
		Art.-no.	Art.-no.	Art.-no.	Art.-no.
250	2.5			42L-3001	
300	2.5	42L-6001		42L-3002	
400	2.5				42L-3003
	5	42L-6002		42L-3004	
500	2.5				42L-3005
	5	42L-6003		42L-3006	
600	2.5		42L-6004		42L-3007*
	5	42L-6005		42L-3008	
750	2.5		42L-6006*		42L-3009*
	5	42L-6007		42L-3010	
800	2.5		42L-6008*		42L-3011*
	5	42L-6009		42L-3012	
1000	2.5		42L-6010*		42L-3013*
	5	42L-6011		42L-3014*	

*FS10

Order list XKBR 44

Secondary current		5 A	1 A
Primary current (A)	Burden (VA)	Accuracy class	Accuracy class
		1FS5	1FS5
		Art.-no.	Art.-no.
250	1.5	44-6001	
	2.5		44-3001
300	2.5	44-6006	44-3006
400	5	44-6011	44-3011
500	5	44-6016	44-3016
600	5	44-6021	44-3021
750	5	44-6026	44-3026
800	5	44-6031	44-3031
1000	5	44-6036	44-3036

Accessories for low-voltage current transformers

Snap-on mountings

Quick Fix

Copper tubes

Mounting angle

Clamping claw + clamp module

Mounting kit

Locking pistons

Secondary cap

Sealed shutter

Copper busbars

Snap-on mounting



Type	For use with following MBS current transformers	Art.-no.
A	ASR 22.3; ASK 21.3; 31.3; 318.3; 41.3; WSK 30, EASK 31.3, EASR 22.3	53011
B	ASK 31.4, EASK 31.4	54011
C	ASK 31.5; WSK 40 N, EASK 31.5, EASK 41.5; ASKDS 55 (2x)	55011
D	ASK 41.4; 412.4; WSK 40, EASK 41.4; ASKDS 33	55012
E	ASR 14.3; 20.3; 201.3, EASR 14.3, EAS 176.3, EASK 176.3	55013
F	ASR 21.3; ASK 205.3	55014
G	CTB 31.35, 41.35	55015
H	KBR 18S	55016
I	KBR 18L: KBR 28	55017
J	CTM 7	55018
K	ASKDS 25	55020

Quick Fix



	Art.-no.
Standard for 85°C continuous temperature	55021
Cable ties heat stabilized for up to 130°C	55024

Copper tubes



Length	Outside Ø	Inner Ø	Max. current	Art.-no.
34	22.5	16.5	600 A	52011
36	22.5	16.5	600 A	52012
34	22.5	12.5	600 A	52021
36	22.5	12.5	600 A	52022
34	22.5	8.5	600 A	52031
36	22.5	8.5	850 A	52032
32	21	12.5	600 A	52041
34	21	12.5	600 A	52042
32	21	8.5	600 A	52051
34	21	8.5	600 A	52052
further lengths and diameters are available upon request				

Mounting angle for 3-phase current transformer set



Mounting angle for triple set (2 pcs.) Plug-in, protection- and tariff current transformers	
For use with following MBS current transformers	Art.-no.
ASK 31.3	59083
ASK 421.4; 41.4; 412.4; WSK 40; WSK 40N	59037
ASK 41.5	59082

Clamping claw + clamp module

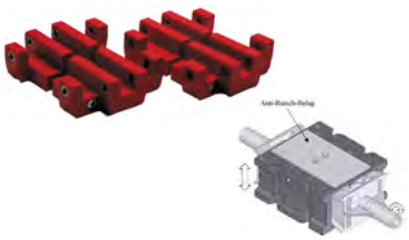

	Art.-no.
Flexible busbar mounting for CT type ASK 165.5 and ASK 205.5	59090
Clamp module with anti-slip surface	59091



RJ45 adaptor

	Art.-no.
Adaptor for easy connection of three split-core current transformers with measuring output 0...333 mV (KBR 18, 32, 44) to measuring unit MPR 3 / MPR 4	RJ45-A



Mounting kit

Screw M12 x 40	Art.-no.
with voltage taps M5	59026
with voltage taps M5 and locking piston for busbar 30 mm	59027
with voltage taps M5 and locking piston for busbar 40 mm	59030
with voltage taps M5 and locking piston for busbar 50 mm	59081
Standard	59028
Standard with locking piston for busbar 30 mm	59029
Standard with locking piston for busbar 40 mm	59030A
Standard with locking piston for busbar 50 mm	59080



Locking pistons

	Dimensions [mm]			Art.-no.
Copper busbar	30 x 6	30 x 8	30 x 10	59035
Copper busbar	40 x 6	40 x 8	40 x 10	59036
Copper busbar	50 x 6	50 x 8	50 x 10	59048



Secondary cap

	Art.-no.
Universal secondary cap for MBS current transformers	53016



Sealed shutters

Type	For use with following MBS current transformers	Art.-no.
A	ASR 22.3, ASK 21.3, 31.3, 318.3, 41.3, 103.3(2x), 123.3(2x), WSK 30, SASR22.3, SASK21.3, ASK(D) 21.3, EASR 22.3, EASK 21.3, EASK 31.3, EASK 123.3, EASK(D) 21.3	59040
B	ASK 31.4, 31.5, 421.4, 41.4, 412.4, WSK 40,WSK 40N, 60, 70.6 N, KSU, SUSK 3...8 primary , SASK 31.5, SASK 421.4, SASK 41.4, ASK(D) 31.5, ASK(D) 31.5 2U, EASK 31.4, EASK 31.5	59041
C	ASK 541.4, 51.4, 561.4, 61.4, 63.4, 63,6, 81.4, 101.4, ASK 105.6, 105.6N, 127.4, 127.6, 128.4, ASK 105.6, 105.6N, 127.4, 127.6, 128.4, 129.10, SUSK 3...8 secondary, SASK 541.4, SASK 61.4, SASK 63.6, SASK 105.6, EASK 541.4, EASK 51.4, EASK 51.4 2U, EASK 61.4, EASK 63.6, EASK 81.4, EASK 105.6, ESUSK 2…8	59042
D	WSK 70.6	59043
E	ASK 31.6, 41.6, 51.6, 61.6, SASK 31.6, SASK 41.6, SASK 51.6, SASK 61.6, EASK 31.6, EASK 41.6, EASK 51.6, EASK 61.6	59044
F	WSK 31.5, EWSK 31.5	59045
G	CTB 31.35; 41.35	59057
H	CTB 51.35	59058
J	CTB 61.35; 81.35; 101.35	59059

Copper busbars

galvanically nickel-plated

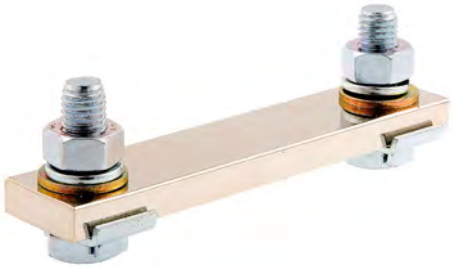

Copper busbar for current transformers for industrial applications

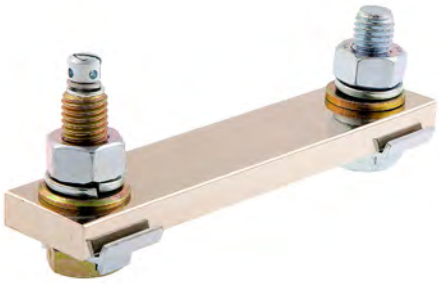

Copper busbar for current transformers for tariff applications

1

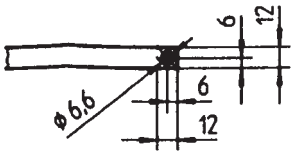

2

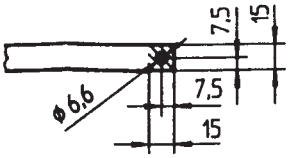

3

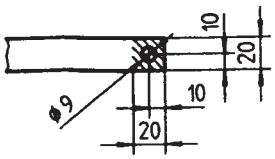

4

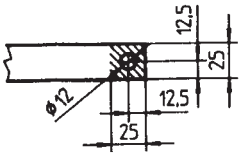

5

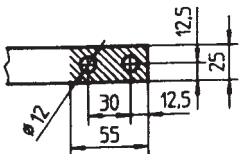

6

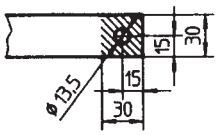

7

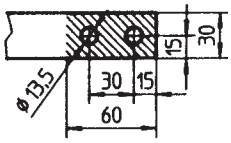

8

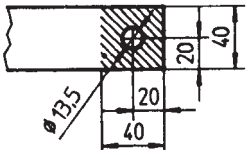

9

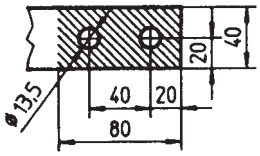

10

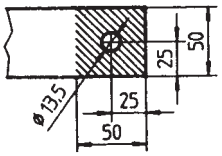

11

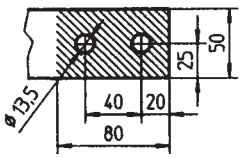

12

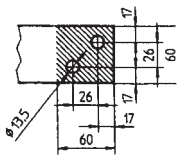

13

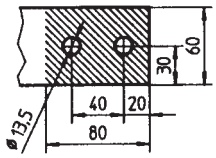

14

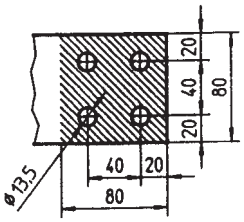

15

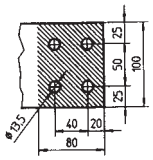

16

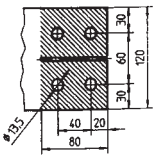

Material E-CU copper plated, acc. to DIN 46433

Copper busbars

Art.-no.	Configuration	Bores	Length	Width	Thickness	Max. current
030060130B006I	Industry	6	130	30	6	300 A
030060130B006E	energy supplier	6	130	30	6	300 A
030060130B006IO	w/o screws	6	130	30	6	300 A
030060140B006I	Industry	6	140	30	6	300 A
030060140B006E	energy supplier	6	140	30	6	300 A
030060140B006IO	w/o screws	6	140	30	6	300 A
030080130B006I	Industry	6	130	30	8	400 A
030080130B006E	energy supplier	6	130	30	8	400 A
030080130B006IO	w/o screws	6	130	30	8	400 A
030080160B006I	Industry	6	160	30	8	400 A
030080160B006E	energy supplier	6	160	30	8	400 A
030080160B006IO	w/o screws	6	160	30	8	400 A
030100130B006I	Industry	6	130	30	10	750 A
030100130B006E	energy supplier	6	130	30	10	750 A
030100130B006IO	w/o screws	6	130	30	10	750 A
030100140B006I	Industry	6	140	30	10	750 A
030100140B006E	energy supplier	6	140	30	10	750 A
030100140B006IO	w/o screws	6	140	30	10	750 A
030100160B006I	Industry	6	160	30	10	750 A
030100160B006E	energy supplier	6	160	30	10	750 A
030100160B006IO	w/o screws	6	160	30	10	750 A
040060140B008I	Industry	8	140	40	6	500 A
040060140B008E	energy supplier	8	140	40	6	500 A
040060140B008IO	w/o screws	8	140	40	6	500 A
040060160B008I	Industry	8	160	40	6	500 A
040060160B008E	energy supplier	8	160	40	6	500 A
040060160B008IO	w/o screws	8	160	40	6	500 A
040100140B008I	Industry	8	140	40	10	800 A
040100140B008E	energy supplier	8	140	40	10	800 A
040100140B008IO	w/o screws	8	140	40	10	800 A
040100160B008I	Industry	8	160	40	10	800 A
040100160B008E	energy supplier	8	160	40	10	800 A
040100160B008IO	w/o screws	8	160	40	10	800 A
050100140B010I	Industry	10	140	50	10	1000 A
050100140B010E	energy supplier	10	140	50	10	1000 A
050100140B010IO	w/o screws	10	140	50	10	1000 A
050100180B010I	Industry	10	180	50	10	1000 A
050100180B010E	energy supplier	10	180	50	10	1000 A
050100180B010IO	w/o screws	10	180	50	10	1000 A
050100220B011I	Industry	11	220	50	10	1000 A
050100220B011E	energy supplier	11	220	50	10	1000 A
050100220B011IO	w/o screws	11	220	50	10	1000 A
060100180B012I	Industry	12	180	60	10	1200 A
060100180B012E	energy supplier	12	180	60	10	1200 A
060100180B012IO	w/o screws	12	180	60	10	1200 A
060100220B013I	Industry	13	220	60	10	1200 A
060100220B013E	energy supplier	13	220	60	10	1200 A
060100220B013IO	w/o screws	13	220	60	10	1200 A
080100240B014I	Industry	14	240	80	10	1500 A
080100240B014E	energy supplier	14	240	80	10	1500 A
080100240B014IO	w/o screws	14	240	80	10	1500 A
100100240B015I	Industry	15	240	100	10	2000 A
100100240B015E	energy supplier	15	240	100	10	2000 A
100100240B015IO	w/o screws	15	240	100	10	2000 A

Primary busbars - delivery content:

Energy supplier = with each 1 pc. mounting kit 59026 and 59028

Industry = with 2 pcs. mounting kit 59028

w/o screws = without screws

Further lengths and bores are available upon request

Low-voltage special current transformers for industrial and tariff applications

Tubular current transformer, fully resin-hardened

ASG 106

Round conductor: 106 mm Current range: 40 ... 1250 A Page: 261
Transformer width: 190 mm

Plug-in current transformer, fully resin-hardened

ASG 123

Busbar 1: 120 x 30 mm Current range: 400 ... 4000 A Page: 263
Schiene 2: 2x 120 x 10 mm
Round conductor: 30 mm
Transformer width: 195 mm

Ring-type current transformer, fully resin-hardened

CTO

Schiene: on request Current range: 50 ... 5000 A Page: 265
Round conductor: max. 360 mm

Split-core current transformer, fully resin-hardened

CTR

Schiene: auf Anfrage Current range: 50 ... 5000 A Page: 267
Round conductor: max. 360 mm

ASG 106

Tubular current transformer for panel boards with hardened Polyurethan resin
Current and protection transformer in one housing

Features / Benefits



- Tubular current transformer with 1…4 measuring systems integrated in one housing
- Rated voltage 0.72 / 3 / - kV
- Primary current range 40A … 1250A
- Secondary currents: 5 A, 2 A or 1 A, other values upon request
- Rated burden 2,5VA … 30VA
- Accuracy classes: 0,2; 0,2s; 0,5; 0,5s; 1; 3
- Protection classes: 5P /10P/ PX
- Thermal nominal continuous rated current I_{cth}: 1.2 x I_{pr}, other values upon request
- Combination from current and protection transformer in one housing
- Measuring system with hardened Polyurethan resin
- Reliable results under extreme mechanical and climatic conditions
- 4 different housing depths enable the implementation of variable customer requirements
- Reduction of the external wiring effort by fixed, arranged flexible connecting cables

Dimensions:

Primary opening diameter: 106 mm
Transformer width: 190 mm
Total depth: 50, 100, 170, 214 mm

General technical specifications:

Thermal nominal continuous rated current I_{cth}:	1.2 x I_{pr} , other values upon request
Thermal nominal short-time current I_{th}:	25 kA, 3 sec., other values upon request
Maximum operating voltage U_m:	0.72 kV
Insulation test voltage:	3 kV, U_{eff}, 50 Hz, 1 min.
Rated frequency:	50 Hz, other values upon request
Insulation class:	F
Applicable technical standards:	DIN EN 61869, part 1 + 2

Further information:

- Housing depth [x] dependent on the number and type of the chosen measuring system
- Measuring systems with hardened Polyurethan resin
- Reliable results under extreme mechanical and climatic conditions due to the full resin hardening
- Resin material with high fire safety (UL94-V0)
- Siemens AG type tests
- Applications: SF6-isolated medium voltage switchgears, wind turbines, facilities for power generation on ships, power distribution systems etc.
- Measuring cores with PTB-Test approval available

- Secondary connections: Flexible copper wire, standard length 3.6 m, 4 mm² other lengths and profiles upon request
- Solidly installed flexible terminal connections, additional textile braided sleeving for the protection of the isolation of the connection cable
- Influence of cable length is taken into account in the interpretation of the measurement systems
- Over current rated limiting factor: See rating plate
- Operating temperature: -5°C < T < +60°C
- Storage temperature: -25°C < T < +70°C
- Housing material: ABS, self-extinguishing, UL94-V0,
- 1-phase low voltage current transformer
- Full resin hardening and a new fixation system allow the application with higher mechanical load (application close to generator)
- High climate resistance and electric safety is achieved by high-quality materials
- Reduction of external wiring by means of flexible selectable length of secondary connection cables
- Mounting of current transformer with 2 pieces (optional 4 pieces) hexagon bolts M8x30
- Packaging unit: 1 pc.
- Customs tariff number: 85043129

Dimensions:

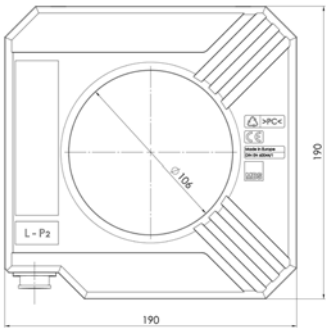

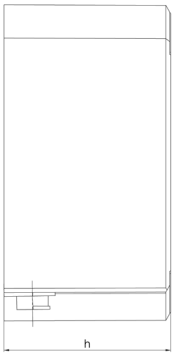

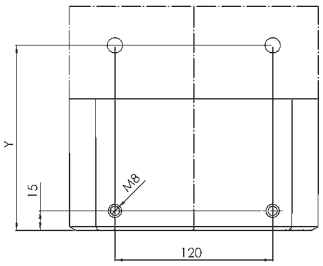

Housing depth (x)	50 mm	100 mm	170 mm	214 mm
Measurement (y) (optional)	-	85 mm	155 mm	199 mm

ASG 123

Plug-in transformer for panel boards with hardened Polyurethan resin
Current and protection transformer in one housing



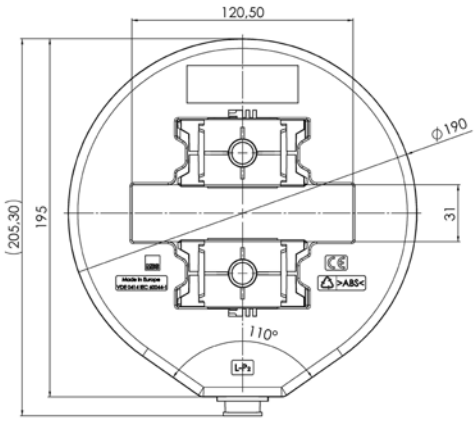

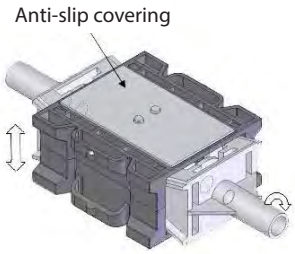

Dimensions:

Primary conductor 1: 2x 120x10 mm
Primary conductor 2: 120x30 mm
Transformer depths: 50, 100, 125 mm

General technical specifications:

Thermal nominal continuous rated current I_{cth}:	1.2 x I_{pr}
Thermal nominal short-time current I_{th}:	25 kA, 3 sec., other values upon request
Maximum operation voltage U_m:	1.2 kV
Insulation test voltage:	6 kV, U_{eff}, 50 Hz, 1 min.
Rated frequency:	50 Hz, other values upon request
Insulation class:	F
Applicable technical standards:	DIN EN 61869, part 1 + 2

Further information:

- Tubular current transformer with 1…3 measuring systems integrated in one housing
- Depth dependent on the number and type of the chosen measuring system
- It is possible to integrate into one housing a combination of measuring transformers and protection transformers
- Measuring systems with hardened Polyurethan resin
- Reliable results under extreme mechanical and climatic conditions
- Resin material with high fire safety (UL94-V0)
- Simple fixation on the bus- bar by means of two clamp modules included in delivery
- Vibration stability of the current transformer was confirmed by an external independent laboratory
- Applications: SF6-isolated medium voltage switchgears, wind turbines, facilities for power generation on ships, power distribution systems etc.
- Primary current range 500 A … 4000 A
- Secondary currents: 5 A, 2 A or 1 A, other values upon request
- Accuracy classes: 1; 0.5; 0.5s; 0.2 and 0.2s
- Protection classes: 5P10, 10P10, 5P20, 10P20, PX

- Secondary connections: Flexible copper wire, standard length 1.5 m, 4 mm^2 other lengths and profiles upon request
- Solidly installed flexible terminal connections, additional textile braided sleeving for the protection of the isolation of the connection cable
- Influence of cable length is taken into account in the interpretation of the measurement systems
- Overload operation limit up to 120% of the primary rated current
- Over current rated limiting factor: See rating plate
- Operating temperature: -5°C < T < +60°C
- Storage temperature: -25°C < T < +70°C
- Housing material: ABS, self-extinguishing, UL94-V0,
- 1-phase low voltage current transformer
- Full resin hardening and a new fixation system allow the application with higher mechanical load (application close to generator)
- High climate resistance and electric safety is achieved by high-quality materials
- Reduction of external wiring by means of flexible selectable length of secondary connection cables
- Packaging unit: 1 pc.
- Customs tariff number: 85043129

Application example:

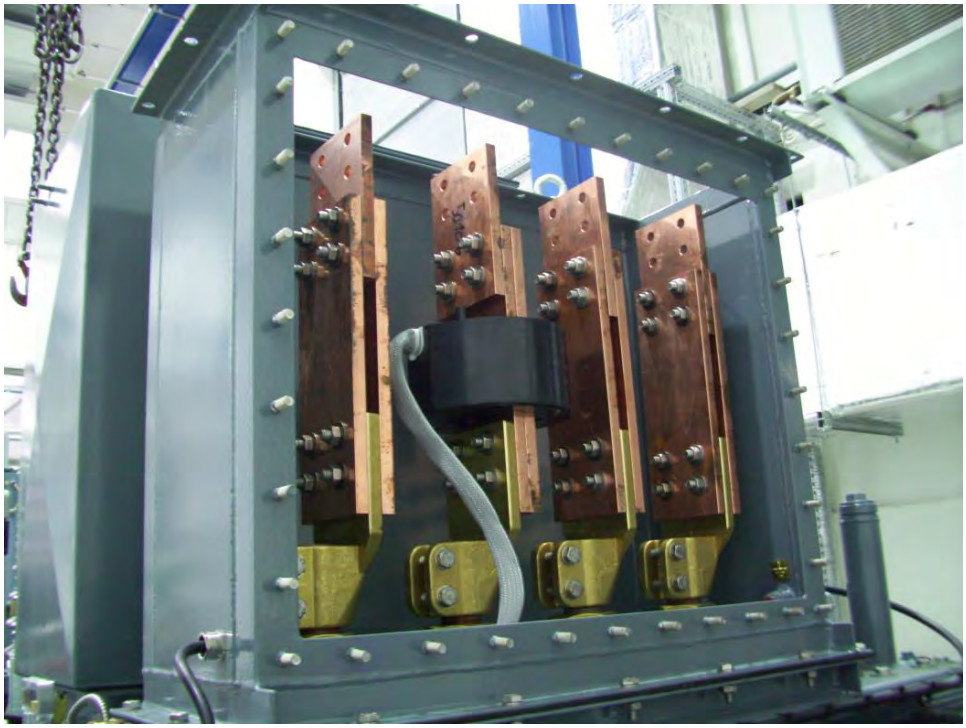

CTO

Split-core current transformer, fully resin-hardened for indoor applications

0.72 kV / 1.2 kV



Features / Benefits

- Split-core current transformer suitable for measuring or protection purposes, depending on the design of the CT
- The modular design of this series allows a large number of varieties within the different CT sizes (please see next page for details about the different dimensions)
- Max. operating voltage: 0.72/3/- kV or 1.2/6/- kV; if the primary conductor is suitably insulated the CT can also be used above 0.72 kV or 1.2 kV
- Primary current range: 30 A … 5000 A
- Secondary currents: 1 A, 2 A or 5 A
- Rated burden: 1 VA … 30 VA
- Accuracy classes: 0.2S; 0.2; 0.5S; 0.5; 1; 3
- Over-current rated limiting factor for measuring cores: FS5 or FS10
- Protection classes: 5P / 10P / PX
- Over-current rated limiting factor for protection cores: 5, 10, 15, 20, 30, 60

Dimensions:	
Primary opening diameter:	max. 200 mm
Transformer width:	150 - 300 mm
Transformer depth:	90 - 300 mm

Please see next page for details about the different dimensions.

General technical specifications:	
Therm. nominal continuous rated current I_{cth}:	1,0 x I_{pr} or 1,2 x I_{pr} other values upon request
Therm. nominal short-time current I_{th}:	100 x I_{pr} / 1 sec., max. 100kA other values upon request
Rated dynamic current I_{dyn}:	2,5 x I_{th}
Max. operating voltage U_m:	0,72 kV or 1,2 kV
Insulation test voltage:	3 kV, U_{eff}, 50 Hz, 1 min. or 6 kV, U_{eff}, 50 Hz, 1 min.
Rated frequency:	50 Hz or 60 Hz other values upon request
Insulation class:	E
Applicable technical standards:	DIN EN 61869, part 1 + 2

Further information:

- Measuring systems fully hardened with Polyurethane resin
- The current transformers type CTO are intended for subsequent installation in existing low-voltage switchgear. In addition, there are customers who use these current transformers in medium-voltage switchgears, if the primary conductor is suitably insulated.
  Further applications are wind turbines, facilities for power generation on ships, power distribution systems, etc.
- The two parts of the current transformer are held together by four screws with springs or spring clips on the sides, which ensures a permanent contact pressure.
- The secondary connection terminals are factory-fitted with M5 screws. A clear plastic cover serves as an touch protection.
- Protection type: Housing: IP54, Terminal cover: IP20
- Operating temperature: -5°C < T < +50°C
- Storage temperature: -25°C < T < +70°C
- Mounting of CT by means of a baseboard attached to the resin body
- Packaging unit: 1 Stk.
- Customs tariff number: 85043129

Dimension drawings:

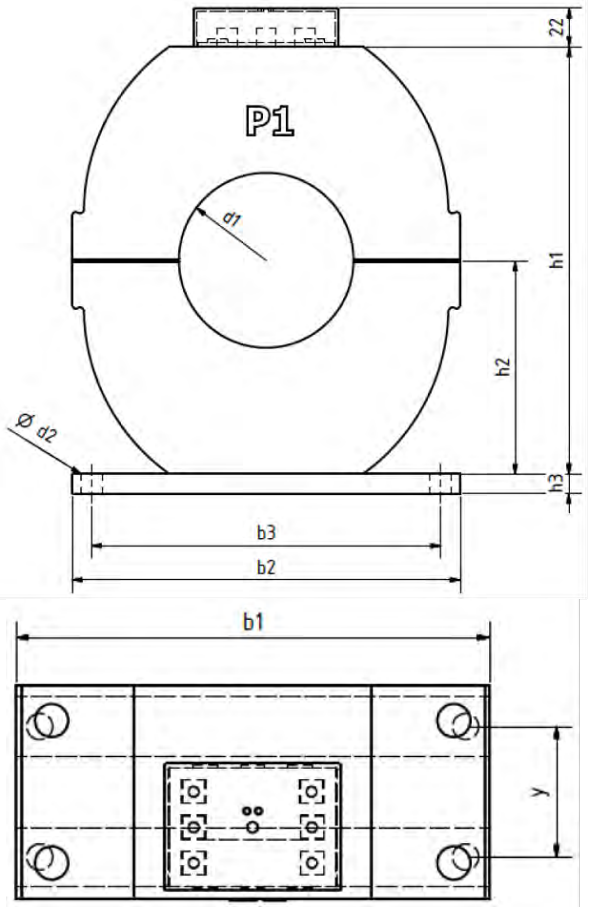

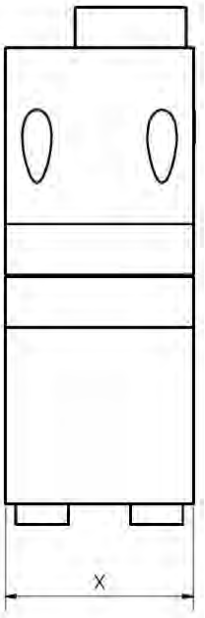

X*	Y*
90	60[1)]
120	90[1)]
150	120
200	170
250	220
300	270

* Dimension x + y depends on the type and number of measuring systems installed.

1) Different dimensions for CTO 100 and CTO 120:
When x = 90 mm: y = 105 mm
When x = 120 mm: y = 135 mm

Determination of current transformer type:

Example: **CTO 200 / 130**

Inner diameter (d1:130 mm)

CT type: CTO 200

CTR

Single-piece current transformers, fully resin-hardened for indoor applications

0.72 kV / 1.2 kV



Features / Benefits

- Single-piece current transformer suitable for measuring or protection purposes, depending on the design of the CT
- The modular design of this series allows a large number of varieties within the different CT sizes (f.e. two cores in one unit); please see next page for details about the different dimensions
- Max. operating voltage: 0.72/3/- kV or 1.2/6/- kV; if the primary conductor is suitably insulated the CT can also be used above 0.72 kV or 1.2 kV
- Primary current range: 30 A … 5000 A
- Secondary currents: 1 A, 2 A or 5 A
- Rated burden: 1 VA … 30 VA
- Accuracy classes: 0.2S; 0.2; 0.5S; 0.5; 1; 3
- Over-current rated limiting factor for measuring cores: FS5 or FS10
- Protection classes: 5P / 10P / PX
- Over-current rated limiting factor for protection cores: 5, 10, 15, 20, 30, 60

Dimensions:	
Primary opening diameter:	max. 200 mm
Transformer width:	100 - 300 mm
Transformer depth:	60 - 300 mm

Please see next page for details about the different dimensions.

General technical specifications:	
Therm. nominal continuous rated current I_{cth}:	1,0 x I_{pr} or 1,2 x I_{pr} other values upon request
Therm. nominal short-time current I_{th}:	100 x I_{pr} / 1 sec., max. 100kA
Rated dynamic current I_{dyn}:	2,5 x I_{th}
Max. operating voltage U_m:	0,72 kV or 1,2 kV
Insulation test voltage:	3 kV, U_{eff}, 50 Hz, 1 min. or 6 kV, U_{eff}, 50 Hz, 1 min.
Rated frequency:	50 Hz or 60 Hz other values upon request
Insulation class:	E
Applicable technical standards:	DIN EN 61869, part 1 + 2

Further information:

- Measuring systems fully hardened with Polyurethane resin
- The current transformers type CTR are intended for installation in low-voltage switchgear.
  In addition, there are customers who use these current transformers in medium-voltage switchgears, if the primary conductor is suitably insulated.
  Further applications are wind turbines, facilities for power generation on ships, power distribution systems, etc.
- The current transformers are manufactured in a standard version with a round window opening. But optionally a rectangular window opening for busbar mounting is possible to produce.
- The secondary connection terminals are factory-fitted with M5 screws. A clear plastic cover serves as a touch protection.
- Protection type: Housing: IP54, Terminal cover: IP20
- Operating temperature: -5°C < T < +50°C
- Storage temperature: -25°C < T < +70°C
- Mounting of CT by means of a baseboard attached to the resin body (optionally: frontal threaded bushes)
- Packaging unit: 1 Stk.
- Customs tariff number: 85043129

Dimension drawings:

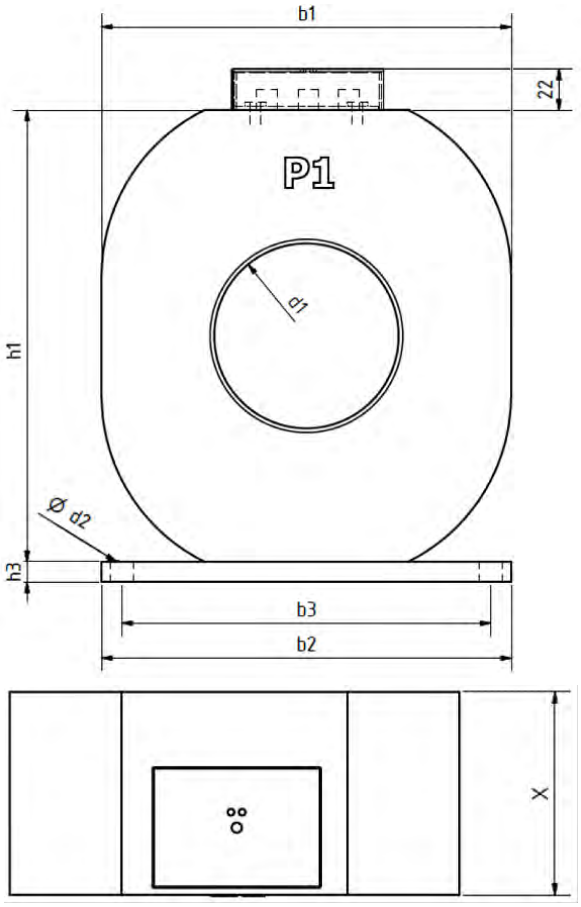

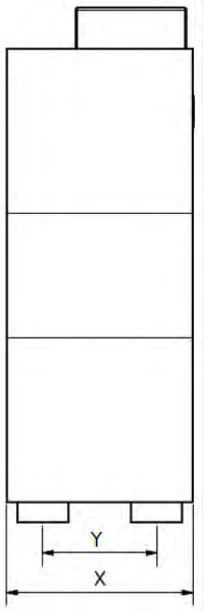

X*	Y*
60	30[1)]
90	60[1)]
120	90[1)]
150	120
200	170
250	220
300	270

* Dimension x + y depends on the type and number of measuring systems installed.

1) Different dimensions for CTO 100 and CTO 120:
When x = 90 mm: y = 105 mm
When x = 120 mm: y = 135 mm

Determination of current transformer type:

Example: **CTR 200** **/** **130**

- 130 — Inner diameter (d1:130 mm)
- CTR 200 — CT type: CTR 200

CT type	b1	b2	b3	max. d1	d2	h1	h2	h3	max. depth
CTR 100	100	100	80	60	9	110	55	5	max. 120 mm
CTR 150	150	150	130	110	9	165	82.5	10	max. 150 mm
CTR 170	170	170	150	110	11	185	97.5	10	max. 150 mm
CTR 200	200	200	180	140	11	220	110	10	max. 200 mm
CTR 250	250	250	230	150	11	270	135	10	max. 200 mm
CTR 300	300	300	280	210	11	330	165	10	max. 250 mm

Voltage transformers

VTLS / VTLS-L	1-pole isolated	Page 272
VTLD / VTLD-L	2-pole isolated	Page 272

Burden range I and II – Differences explained quickly!

In July 2011, the IEC 61869-3 (Additional requirements for inductive voltage transformers) replaced the previously valid IEC 60044-2 ab. One of the most important changes is, that loads with a power factor of 1 are permissible in addition to the known loads with power factor 0.8.
The standard divides these burdens into two burden ranges:

The **burden range I** with a **power factor of 1** includes the following burdens: 1.0 – 2.5 – 5.0 – 10 VA
The **burden range II** with a **power factor of 0.8** includes the following burdens: 10 – 25 – 50 – 100 VA

Both burden ranges are tested for accuracy between 80 % and 120 % of the rated voltage. The burden range to be checked differs as follows:

Burden range I:

Each burden from **0 VA up to 100 %** of the rated burden with a **power factor of 1** must be within the accuracy class defined for the voltage transformer.

Burden range II:

Each burde from **25 % up to 100 %** of the rated burden with a **power factor of 0.8** inductive must be within the accuracy class defined for the voltage transformer.

This regulation refers to the usage of modern measuring devices, which ordinarily have a voltage input with a high pure omic resistance. The power factor of 1 required in this case is covered by burden range I. An often encountered underloading is therefore also excluded. Details can be found in the illistrations on the following page.

Error limits for voltage transformers for classes 0.2 ... 3 according to DIN EN 61869, part 3

Accuracy class	Voltage error ε_u	Phase displacement error Δ_φ
	± %	± min.
0.2	0.2	10
0.5	0.5	20
1	1.0	40
3	3.0	-

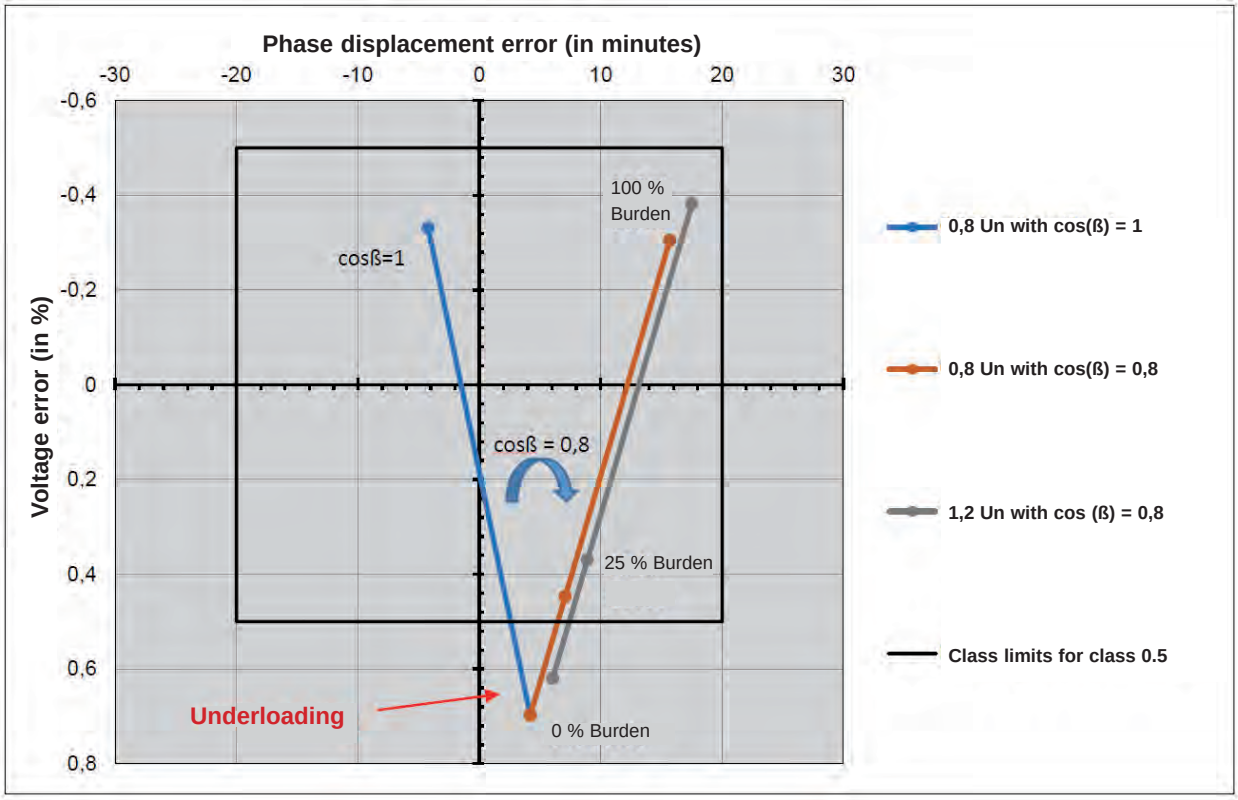

Fig. 1: Exemplary error chart of voltage transformer BR II in class 0.5

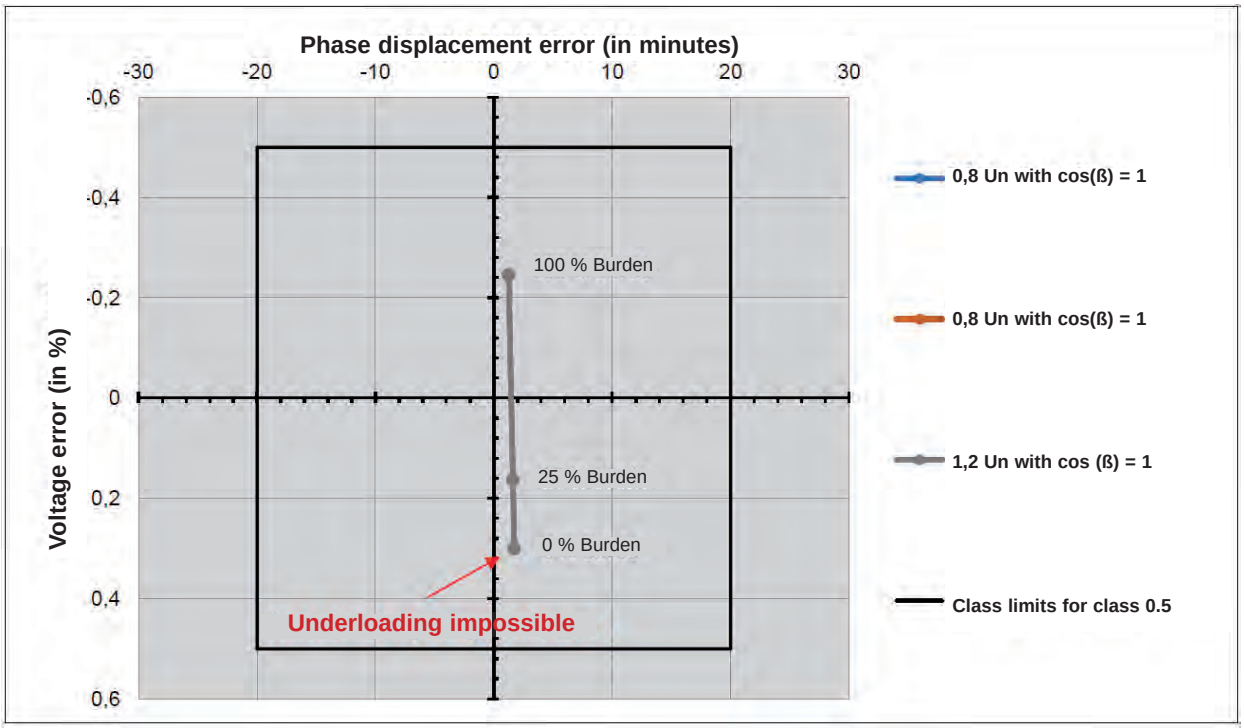

Fig. 2: Exemplary error chart of voltage transformer BR I in class 0.5

VTLS(-L)/VTLD(-L) - Single- and double-pole insulated voltage transformers

MBS AG's low-voltage voltage transformers are particularly resistant to voltage transients due to their physical design and generate very low heat losses thanks to the use of low-loss toroidal cores.

They also offer class-accurate harmonic transmission up to 20 kHz.

Our product range includes single-pole insulated voltage transformers for line-to-ground connection and double-pole insulated voltage transformers for line-to-line connection.



Features / benefits

- Primary rated voltage range from 100/√3 V up to 1000/√3 V
  resp. 100 V up to 1000 V
- Secondary rated voltage 100/√3 V or 100 V
- Accuracy: Measuring: cl.0.2 / 0.5 / 1
  Protection: cl. 3P / 6P
- Very low own-consumption of voltage transformers due to powerful toroidal cores
- Perfect for usage with modern measuring devices, since underloading is not possible in burden range 1 (acc. to IEC 61869-3), please see the following order list
- Very easy connection (primary + secondary) via screw connection M5 x 8

General technical characteristics

- Nominal frequency: 50 or 60 Hz
- Maximum operating voltage U_m
  for U_{pr} ≤ 600/√3 V or 600 V: 0.72 kV r.m.s.
  for U_{pr} > 600/√3 V or 600 V: 1.2 kV r.m.s.
- Continuous operating voltage: 1.2 x U_{pr}
- Rated voltage factor F_V: 1.9 x U_{pr} / 8h (VTLS)
- Insulation class: E
- Operating temperature range: - 5°C … +50°C
- Storage temperature range: -40°C … +85°C
- Protection class acc. IEC 60529: IP 20
- Weight: approx. 2.13 kg

Subject to technical modifications without notice
Please note, that the above mentioned data are standard values. Other values upon request.

Connection drawings

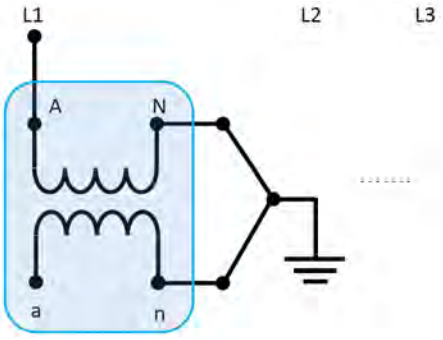

Connection of voltage transformer VTLS(-L)
phase-earth

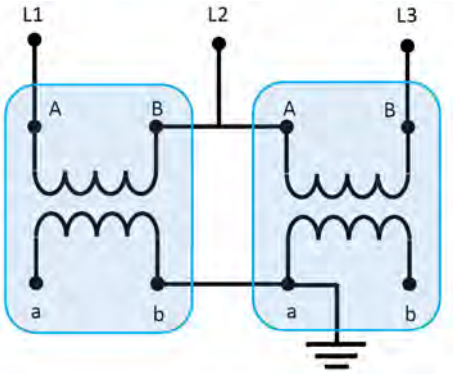

Connection of two voltage transformers VTLD(-L)
phase-phase (2-watt-meter circuit / Aron circuit)



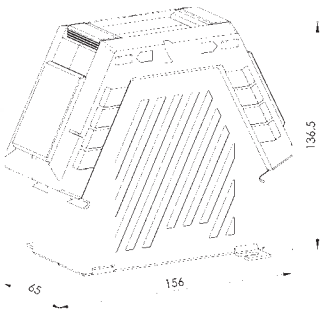

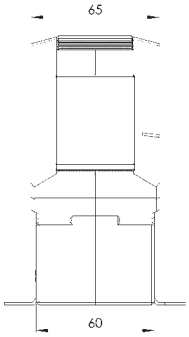

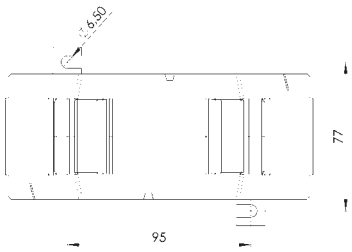

Order list - VTLS (one-pole isolated, not galvanically isolated)

Max. operation voltage U_m	Primary rated voltage U_{pr}	Secondary rated voltage 100/√3 V - Nominal frequency: 50 Hz				
		cl. 0.2 / 3P (BR 1)	cl.0.5 / 3P (BR 1)	cl.1 / 3P (BR 1)	cl.3 / 3P (BR 2)	VA_{th}
		0-1 VA	0-2.5 VA	0-5 VA	15 VA	
		Order no.	Order no.	Order no.	Order no.	
0.72 kV	100/√3 V	601-0001	601-0020	601-0040	601-0060	25
	110/√3 V	601-0002	601-0021	601-0041	601-0061	25
	200/√3 V	601-0003	601-0022	601-0042	601-0062	25
	220/√3 V	601-0004	601-0023	601-0043	601-0063	25
	230/√3 V	601-0005	601-0024	601-0044	601-0064	25
	380/√3 V	601-0006	601-0025	601-0045	601-0065	25
	400/√3 V	601-0007	601-0026	601-0046	601-0066	25
	500/√3 V	601-0008	601-0027	601-0047	601-0067	25
	600/√3 V	601-0009	601-0028	601-0048	601-0068	25
1.2 kV	660/√3 V	601-0010	601-0029	601-0049	601-0069	25
	690/√3 V	601-0011	601-0030	601-0050	601-0070	25
	750/√3 V	601-0012	601-0031	601-0051	601-0071	25
	800/√3 V	601-0014	601-0033			
	1000/√3 V	601-0013	601-0032	601-0052	601-0072	25

BR 1: Burden range 1: cos phi = 1
BR 2: Burden range 2: cos phi = 0.8

Order list - VTLD (two-pole isolated , galvanically isolated)

Max. operation voltage U_m	Primary rated voltage U_{pr}	Secondary rated voltage 100 V - Nominal frequency: 50 Hz					
		cl. 0.2 (BR 1)	cl.0.5 (BR 1)	cl.1 (BR 1)	cl.1 (BR 2)	cl.3 (BR 2)	VA_{th}
		0-2.5 VA	0-5 VA	0-10 VA	10VA	25 VA	
		Order no.	Order no.	Order no.	Order no.	Order no.	
0.72 kV	100 V	602-0001	602-0020	602-0040	602-0060	602-0080	25
	110 V	602-0002	602-0021	602-0041	602-0061	602-0081	25
	200 V	602-0003	602-0022	602-0042	602-0062	602-0082	25
	220 V	602-0004	602-0023	602-0043	602-0063	602-0083	25
	230 V	602-0005	602-0024	602-0044	602-0064	602-0084	25
	380 V	602-0006	602-0025	602-0045	602-0065	602-0085	25
	400 V	602-0007	602-0026	602-0046	602-0066	602-0086	25
	500 V	602-0008	602-0027	602-0047	602-0067	602-0087	25
	600 V	602-0009	602-0028	602-0048	602-0068	602-0088	25
1.2 kV	660 V	602-0010	602-0029	602-0049	602-0069	602-0089	25
	690 V	602-0011	602-0030	602-0050	602-0070	602-0090	25
	750 V	602-0012	602-0031	602-0051	602-0071	602-0091	25
	800 V	602-0014	602-0033		602-0073	602-0093	
	1000 V	602-0013	602-0032	602-0052	602-0072	602-0092	25

BR 1: Burden range 1: cos phi = 1
BR 2: Burden range 2: cos phi = 0.8



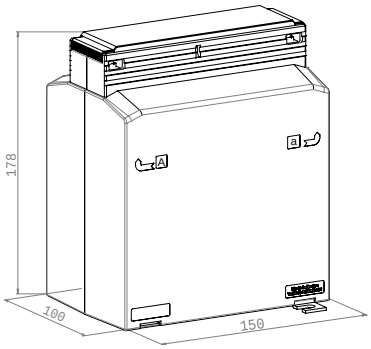

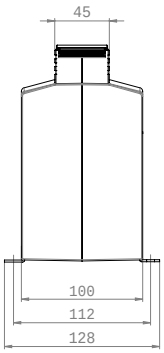

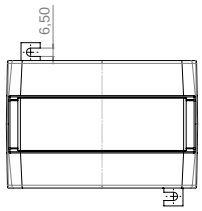

Order list - VTLS-L (one-pole isolated, not galvanically isolated)

Max. operation voltage U_m	Primary rated voltage U_{pr}	Secondary rated voltage 100/√3 V - Nominal frequency: 50 Hz			
		cl. 0.5 (BB 1)	cl.0.5 (BB 2)	cl.1 (BB 2)	VA_{th}
		0-25 VA	25 VA	50 VA	
		Order no.	Order no.	Order no.	
0.72 kV	100/√3 V	603-0001	603-0021	603-0041	100
	110/√3 V	603-0002	603-0022	603-0042	100
	200/√3 V	603-0003	603-0023	603-0043	100
	220/√3 V	603-0004	603-0024	603-0044	100
	230/√3 V	603-0005	603-0025	603-0045	100
	380/√3 V	603-0006	603-0026	603-0046	100
	400/√3 V	603-0007	603-0027	603-0047	100
	500/√3 V	603-0008	603-0028	603-0048	100
	600/√3 V	603-0009	603-0029	603-0049	100
1.2 kV	660/√3 V	603-0010	603-0030	603-0050	100
	690/√3 V	603-0011	603-0031	603-0051	100
	750/√3 V	603-0012	603-0032	603-0052	100
	800/√3 V	603-0019			100
	1000/√3 V	603-0013	603-0033	603-0053	100

BR 1: Burden range 1: cos phi = 1
BR 2: Burden range 2: cos phi = 0.8

Order list - VTLD-L (two-pole isolated , galvanically isolated)

Max. operation voltage U_m	Primary rated voltage U_{pr}	Secondary rated voltage 100 V - Nominal frequency: 50 Hz			
		cl. 0.5 (BB 1)	cl.0.5 (BB 2)	cl.1 (BB 2)	VA_{th}
		0-50 VA	50 VA	100 VA	
		Order no.	Order no.	Order no.	
0.72 kV	100 V	604-0001	604-0021	604-0041	100
	110 V	604-0002	604-0022	604-0042	100
	200 V	604-0003	604-0023	604-0043	100
	220 V	604-0004	604-0024	604-0044	100
	230 V	604-0005	604-0025	604-0045	100
	380 V	604-0006	604-0026	604-0046	100
	400 V	604-0007	604-0027	604-0047	100
	500 V	604-0008	604-0028	604-0048	100
	600 V	604-0009	604-0029	604-0049	100
1.2 kV	660 V	604-0010	604-0030	604-0050	100
	690 V	604-0011	604-0031	604-0051	100
	750 V	604-0012	604-0032	604-0052	100
	800 V	604-0014	604-0034	604-0054	100
	1000 V	604-0013	604-0033	604-0053	100

BR 1: Burden range 1: cos phi = 1
BR 2: Burden range 2: cos phi = 0.8

For the most suitable solution, Ask us!

MBS develops and manufactures a comprehensive range of individual, customized solutions of low-voltage measuring and protection current transformers.
The realization of all special solutions offered by MBS are carried out in compliance with the valid technical standards.

A well trained team of experienced employees assist you in searching and realizing your individual solution.
Ask us!







In order to attend fully to your inquiry, we ask you to furnish us with the following information:

- Transmission ratio (I_p / I_s [A])
- Required burden [VA]
- Necessary accuracy class
- Measuring transformer: Cl. 0,2s / 0,2 / 0,5s / 0,5 / 1 / 3
- Protection transformer: Cl. 5P / 10P / PX
- Thermal nominal short-time current I_{th}
- Maximum permissible external size [mm]
- Minimum permissible inner size (at primary conductor) [mm]
- Maximum depth [mm]

Reliable energy measuring

MBS AG & Co. KG
Eisbachstraße 51 | 74429 Sulzbach-Laufen
Germany

Tel.: +49 (0) 7976 / 9851- 400
Fax: +49 (0) 7976 / 9851- 90
sales@mbs-ag.com | www.mbs-ag.com

MBS IDNR 8.4.0391/1000/07-2025

@mbsfirma mbs ag your.mbsag